Operation and Installation

Automatic Transfer Switch

Model:

RDT

100–400 Amp Automatic Transfer Switches
100 and 200 Amp Automatic Transfer Switches with Load Centers
200 and 400 Amp Service Entrance Rated Transfer Switches

Electrical Controls:
MPAC™ 500

ISO 9001
KOHLER POWER SYSTEMS
NATIONALLY REGISTERED

KOHLER®
Power Systems

TP-6345 9/13j

Product Identification Information

Product identification numbers determine service parts. Record the product identification numbers in the spaces below immediately after unpacking the products so that the numbers are readily available for future reference. Record field-installed kit numbers after installing the kits.

Transfer Switch Identification Numbers

Record the product identification numbers from the transfer switch nameplate.

Model Designation _____

Serial Number _____

Accessory Number	Accessory Description

Table of Contents

Product Identification Information 2

Safety Precautions and Instructions 5

Introduction 7
- Nameplate 7
- Model Code 8

Service Assistance 9

Section 1 Description 11
- 1.1 Transfer Switch Description 11
- 1.2 Load Centers 11
- 1.3 Service Entrance Models 11

Section 2 Installation 13
- 2.1 Introduction 13
- 2.2 Receipt of Unit 13
  - 2.2.1 Inspection 13
  - 2.2.2 Storage 13
  - 2.2.3 Lifting 13
  - 2.2.4 Unpacking 13
- 2.3 Installation 14
- 2.4 Manual Operation Check 15
- 2.5 Electrical Wiring 16
  - 2.5.1 Load Center Circuit Breakers 16
  - 2.5.2 AC Power Connections 16
  - 2.5.3 Neutral Bonding Jumper, Service Entrance Models 17
- 2.6 Controller Connections 22
  - 2.6.1 Engine Start Connections 22
  - 2.6.2 Optional Controller Connections 23
  - 2.6.3 Frequency Selection 23
- 2.7 Accessory Connections 24
  - 2.7.1 Auxiliary Contacts (Optional) 24
  - 2.7.2 Accessory Board 24
  - 2.7.3 External Alarm Module (EAM) 24
  - 2.7.4 SE Model Battery Charger Circuit Breaker Connection 25
  - 2.7.5 SE Model Accessory Connections 25
- 2.8 Operation Test 25
- 2.9 Exerciser Setup 26
  - 2.9.1 Standard Exerciser 26
  - 2.9.2 Exerciser Options 27
- 2.10 Warranty Registration 27

Section 3 Operation 29
- 3.1 Introduction 29
- 3.2 Controls 29
- 3.3 Faults 30
  - 3.3.1 Failure to Acquire Emergency Source Warning 30
  - 3.3.2 Failure to Transfer Warning 30
  - 3.3.3 Auxiliary Switch Fault 30
- 3.4 Controller Resetting 30
  - 3.4.1 Fault Reset 30
  - 3.4.2 Controller Reset 30
  - 3.4.3 Alarm Silence 30
- 3.5 Operation Sequence 30
  - 3.5.1 Source Sensing 30
  - 3.5.2 Transfer Sequence 31

Table of Contents, continued

Section 4 Accessories **33**
4.1 Accessory Board 33
4.1.1 Audible Alarm 33
4.1.2 EAM Connection (P13) 33
4.1.3 Inputs and Outputs (Connector P9) 34
4.1.4 Time Delay Adjustment Switches 34
4.1.5 DIP Switches 35
4.2 External Alarm Module (EAM) 36
4.2.1 Installation 36
4.2.2 Connection 36
4.2.3 EAM Operation 36
4.2.4 EAM Indicators 37
4.3 Programmable Exerciser 37
4.4 Model SE Accessories 38
4.4.1 Surge Protective Device (SPD) (Model SE) 38
4.4.2 Accessory Circuit Breakers (Model SE) 38
4.4.3 Enclosure Space Heater (Model SE) 39

Section 5 Service Disconnect, SE Model **41**
5.1 Service Disconnect Procedure 41
5.2 Source Circuit Breaker Reset 41

Section 6 Scheduled Maintenance **43**
6.1 Introduction 43
6.2 Testing 44
6.2.1 Weekly Generator Set Exercise 44
6.2.2 Monthly Automatic Control System Test 44
6.3 Inspection and Service 44
6.3.1 General Inspection 44
6.3.2 SPD Inspection (Model SE) 45
6.3.3 Other Inspections and Service 45
6.4 Service Schedule 46
6.5 Surge Protective Device (SPD) Replacement 47

Section 7 Diagrams and Drawings **49**

Appendix A Abbreviations 85

IMPORTANT SAFETY INSTRUCTIONS. Electromechanical equipment, including generator sets, transfer switches, switchgear, and accessories, can cause bodily harm and pose life-threatening danger when improperly installed, operated, or maintained. To prevent accidents be aware of potential dangers and act safely. Read and follow all safety precautions and instructions. SAVE THESE INSTRUCTIONS.

This manual has several types of safety precautions and instructions: Danger, Warning, Caution, and Notice.

DANGER

Danger indicates the presence of a hazard that ***will cause severe personal injury, death***, or ***substantial property damage***.

WARNING

Warning indicates the presence of a hazard that ***can cause severe personal injury, death,*** or ***substantial property damage***.

CAUTION

Caution indicates the presence of a hazard that ***will*** or ***can cause minor personal injury*** or ***property damage***.

NOTICE

Notice communicates installation, operation, or maintenance information that is safety related but not hazard related.

Safety decals affixed to the equipment in prominent places alert the operator or service technician to potential hazards and explain how to act safely. The decals are shown throughout this publication to improve operator recognition. Replace missing or damaged decals.

Accidental Starting

WARNING

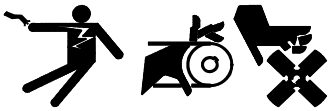

Accidental starting.
Can cause severe injury or death.

Disconnect the battery cables before working on the generator set. Remove the negative (-) lead first when disconnecting the battery. Reconnect the negative (-) lead last when reconnecting the battery.

Disabling the generator set. Accidental starting can cause severe injury or death. Before working on the generator set or connected equipment, disable the generator set as follows: (1) Move the generator set master switch to the OFF position. (2) Disconnect the power to the battery charger. (3) Remove the battery cables, negative (-) lead first. Reconnect the negative (-) lead last when reconnecting the battery. Follow these precautions to prevent starting of the generator set by an automatic transfer switch, remote start/stop switch, or engine start command from a remote computer.

Hazardous Voltage/ Moving Parts

DANGER

Hazardous voltage.
Will cause severe injury or death.

Disconnect all power sources before opening the enclosure.

DANGER

Hazardous voltage.
Will cause severe injury or death.

Only authorized personnel should open the enclosure.

DANGER

Hazardous voltage.
Will cause severe injury or death.

This equipment must be installed and serviced by qualified electrical personnel.

Grounding electrical equipment. Hazardous voltage can cause severe injury or death. Electrocution is possible whenever electricity is present. Ensure you comply with all applicable codes and standards. Electrically ground the generator set, transfer switch, and related equipment and electrical circuits. Turn off the main circuit breakers of all power sources before servicing the equipment. Never contact electrical leads or appliances when standing in water or on wet ground because these conditions increase the risk of electrocution.

Short circuits. Hazardous voltage/current can cause severe injury or death. Short circuits can cause bodily injury and/or equipment damage. Do not contact electrical connections with tools or jewelry while making adjustments or repairs. Remove all jewelry before servicing the equipment.

Making line or auxiliary connections. Hazardous voltage can cause severe injury or death. To prevent electrical shock deenergize the normal power source before making any line or auxiliary connections.

Servicing the transfer switch. Hazardous voltage can cause severe injury or death. Deenergize all power sources before servicing. Turn off the main circuit breakers of all transfer switch power sources and disable all generator sets as follows: (1) Move all generator set master controller switches to the OFF position. (2) Disconnect power to all battery chargers. (3) Disconnect all battery cables, negative (-) leads first. Reconnect negative (-) leads last when reconnecting the battery cables after servicing. Follow these precautions to prevent the starting of generator sets by an automatic transfer switch, remote start/stop switch, or engine start command from a remote computer. Before servicing any components inside the enclosure: (1) Remove all jewelry. (2) Stand on a dry, approved electrically insulated mat. (3) Test circuits with a voltmeter to verify that they are deenergized.

⚠ WARNING

Airborne particles.
Can cause severe injury or blindness.

Wear protective goggles and clothing when using power tools, hand tools, or compressed air.

Heavy Equipment

⚠ WARNING

Unbalanced weight.
Improper lifting can cause severe injury or death and equipment damage.

Use adequate lifting capacity.
Never leave the transfer switch standing upright unless it is securely bolted in place or stabilized.

Notice

NOTICE

Hardware damage. The transfer switch may use both American Standard and metric hardware. Use the correct size tools to prevent rounding of the bolt heads and nuts.

NOTICE

Foreign material contamination. Cover the transfer switch during installation to keep dirt, grit, metal drill chips, and other debris out of the components. Cover the solenoid mechanism during installation. After installation, use the manual operating handle to cycle the contactor to verify that it operates freely. Do not use a screwdriver to force the contactor mechanism.

NOTICE

Electrostatic discharge damage. Electrostatic discharge (ESD) damages electronic circuit boards. Prevent electrostatic discharge damage by wearing an approved grounding wrist strap when handling electronic circuit boards or integrated circuits. An approved grounding wrist strap provides a high resistance (about 1 megohm), *not a direct short*, to ground.

This manual provides operation and installation instructions for Kohler Model RDT automatic transfer switches with MPAC® 500 electrical controls.

Information in this publication represents data available at the time of print. Kohler Co. reserves the right to change this literature and the products represented without notice and without any obligation or liability whatsoever.

Read this manual and carefully follow all procedures and safety precautions to ensure proper equipment operation and to avoid bodily injury. Read and follow the Safety Precautions and Instructions section at the beginning of this manual. Keep this manual with the equipment for future reference.

The equipment service requirements are very important to safe and efficient operation. Inspect parts often and perform required service at the prescribed intervals. Obtain service from an authorized service distributor/ dealer to keep equipment in top condition.

Nameplate

A nameplate attached to the inside of the enclosure cover includes a model designation, a serial number, ratings, and other information about the transfer switch. See Figure 1.

Check the transfer switch model number from the transfer switch nameplate and verify that it matches the model shown on the front cover of this manual before proceeding with installation.

Copy the model designation, serial number, and accessory information from the nameplate to the spaces provided in the Product Identification Information section located inside the front cover of this manual for use when requesting service or parts. Copy the model designation into the spaces in the Model Code chart and use the chart to interpret the model designation.

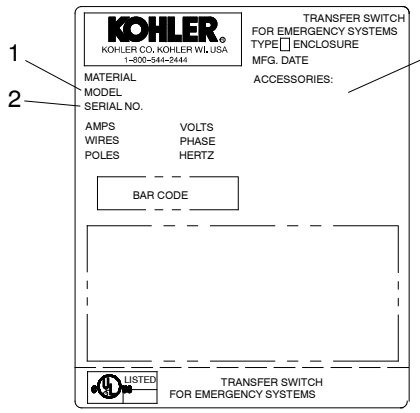

GM21291-E

1. Model designation
2. Serial number
3. Factory-installed accessory numbers

Figure 1 Typical Transfer Switch Nameplate

Model Code

Record the transfer switch model designation in the boxes below. The transfer switch model designation defines characteristics and ratings as explained in the accompanying chart.

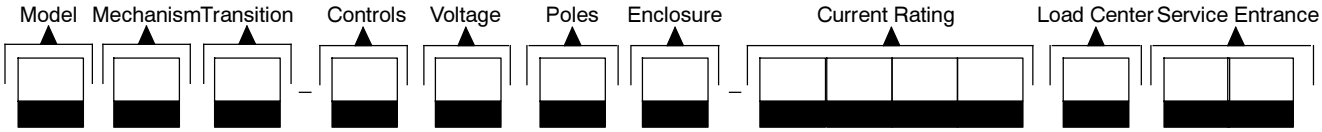

Kohler® Model Designation Key

This chart explains the Kohler® transfer switch model designation system. The sample model designation shown is for a Model R service entrance rated automatic transfer switch that uses a standard-transition contactor with MPAC® 500 electrical controls rated at 240 volts/60 Hz, 2 poles, 3 wires, and solid neutral in a NEMA 3R enclosure with a current rating of 200 amperes and no load center.

SAMPLE MODEL DESIGNATION

RDT-CFNC-0200ASE

Model
R: Model R automatic transfer switch

Mechanism
D: Specific-breaker rated

Transition
T: Standard transition

Electrical Controls
C: MPAC™ 500 (Microprocessor ATS Control)

Voltage/Frequency
D: 220 Volts/50 Hz
F: 240 Volts/60 Hz

Number of Poles/Wires
N: 2-pole, 3-wire, solid neutral

Enclosure
A: NEMA 1 (steel) *
C: NEMA 3R (aluminum)

Current Rating: Numbers indicate the current rating of the switch in amperes:
0100: 100 amps 0200: 200 amps 0400: 400 amps

Load Center
A: Without load center
B: With load center (not available on 400 amp models)

Service Entrance:
SE: Service entrance model (200 and 400 amp models available)
Blank: Not rated for service entrance

* NEMA 1 only: 100 and 200 amp models without load centers can be recess-mounted between wall studs. Optional wall-mount bezel is available.

For professional advice on generator set power requirements and conscientious service, please contact your nearest Kohler distributor or dealer.

- Consult the Yellow Pages under the heading Generators—Electric.
- Visit the Kohler Power Systems website at KOHLERPower.com.
- Look at the labels and stickers on your Kohler product or review the appropriate literature or documents included with the product.
- Call toll free in the US and Canada 1-800-544-2444.
- Outside the US and Canada, call the nearest regional office.

Headquarters Europe, Middle East, Africa (EMEA)
Kohler Power Systems
3 rue de Brennus
93200 Saint Denis
France
Phone: (33) 1 49 178300
Fax: (33) 1 49 178301

Asia Pacific
Power Systems Asia Pacific Regional Office
Singapore, Republic of Singapore
Phone: (65) 6264-6422
Fax: (65) 6264-6455

China
North China Regional Office, Beijing
Phone: (86) 10 6518 7950
(86) 10 6518 7951
(86) 10 6518 7952
Fax: (86) 10 6518 7955

East China Regional Office, Shanghai
Phone: (86) 21 6288 0500
Fax: (86) 21 6288 0550

India, Bangladesh, Sri Lanka
India Regional Office
Bangalore, India
Phone: (91) 80 3366208
(91) 80 3366231
Fax: (91) 80 3315972

Japan, Korea
North Asia Regional Office
Tokyo, Japan
Phone: (813) 3440-4515
Fax: (813) 3440-2727

Latin America
Latin America Regional Office
Lakeland, Florida, USA
Phone: (863) 619-7568
Fax: (863) 701-7131

Notes

1.1 Transfer Switch Description

An automatic transfer switch (ATS) transfers electrical loads from a normal source of electrical power to an emergency source when the normal source voltage or frequency falls below an acceptable level. The normal source is typically utility power. The emergency source is usually a generator set.

When the normal source fails, the ATS signals the emergency source generator set to start. When the emergency source reaches acceptable levels and stabilizes, the ATS transfers the electrical load to the emergency source.

The ATS continuously monitors the normal source and transfers the load back when the normal source returns and stabilizes. After transferring the load back to the normal source, the ATS removes the generator start signal, allowing the generator set to shut down.

Figure 1-1 shows a typical installation block diagram.

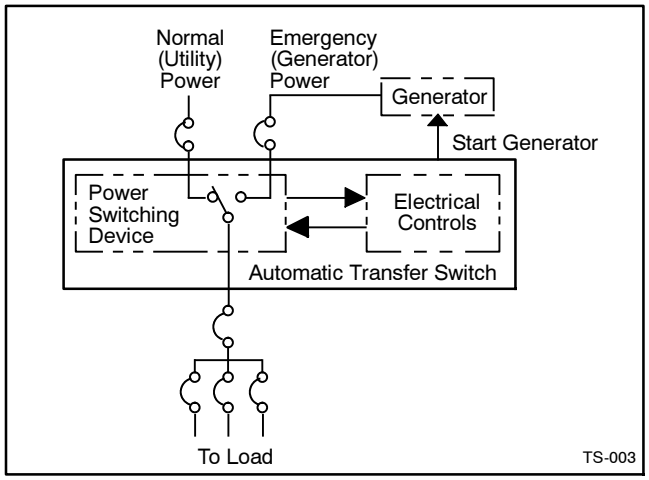

Figure 1-1 Typical ATS Block Diagram

1.2 Load Centers

Model RDT 100 and 200 amp transfer switches are available with or without built-in load centers. Models without load centers require the installation of a separate load panel.

Loads. The transfer switch can be connected to supply all of the electrical loads in the home, or only the essential loads such as the furnace, refrigerator, well pump, and selected light circuits. Identify the essential circuits that must be supplied during a power outage. Verify that the generator set and transfer switch are adequately rated to supply all of the selected loads.

Circuit breakers. Because the size and number of circuit breakers required will vary with each application, circuit breakers are not provided with the transfer switch load center.

Determine the circuits that will be connected to the transfer switch (essential loads). Identify the breakers for those circuits in the main distribution panel.

The ATS load center requires Square D type QO breakers. Up to 8 type QOT tandem breakers can be used on 100 amp models. If the main distribution panel uses the same type of breakers, the breakers can be moved from the main panel to the load center. Otherwise, obtain new Square D type QO circuit breakers. For each circuit, the rating of the load center circuit breaker must match the rating of the existing breaker in the main panel.

Verify that the total rating for all of the breakers used in the load center does not exceed the rating of the transfer switch.

1.3 Service Entrance Models

Service entrance models use a circuit breaker to provide the service disconnect for the utility source.

The SE model is equipped with a 15-amp, single-pole circuit breaker for the generator set battery charger.

A circuit breaker for the generator set engine heater is available as an optional accessoryfor the 200 amp SE model. The engine heater circuit is standard on the 400 amp SE model.

A surge suppressor for the utility source and an enclosure space heater are also available as optional accessories.

Notes

2.1 Introduction

Kohler transfer switches are shipped factory-wired, factory-tested, and ready for installation. Have the equipment installed only by trained and qualified personnel, and verify that the installation complies with applicable codes and standards. Protect the switch against damage before and during installation.

2.2 Receipt of Unit

2.2.1 Inspection

At the time of delivery, inspect the packaging and the transfer switch for signs of shipping damage. Unpack the transfer switch as soon as possible and inspect the exterior and interior for shipping damage. If damage and/or rough handling is evident, immediately file a damage claim with the transportation company.

2.2.2 Storage

Store the transfer switch in its protective packing until final installation. Protect the transfer switch at all times from moisture, construction grit, and metal chips. Avoid storage in cold or damp areas where moisture could condense on the unit. See Figure 2-1 for acceptable storage temperatures.

2.2.3 Lifting

⚠ WARNING

Unbalanced weight.
Improper lifting can cause severe injury or death and equipment damage.

Use adequate lifting capacity.
Never leave the transfer switch standing upright unless it is securely bolted in place or stabilized.

See Figure 2-2 or the dimensional drawing for the weight of the transfer switch. Use a spreader bar to lift the transfer switch. Attach the bar only to the enclosure's mounting holes or lifting brackets; do not lift the unit any other way. Close and latch the enclosure door before moving the unit.

2.2.4 Unpacking

Allow the equipment to warm to room temperature for at least 24 hours before unpacking to prevent condensation on the electrical apparatus. Use care when unpacking to avoid damaging transfer switch components. Use a vacuum cleaner or a dry cloth to remove dirt and packing material that may have accumulated in the transfer switch or any of its components.

Note: Do not use compressed air to clean the switch. Cleaning with compressed air can cause debris to lodge in the components and damage the switch.

Item	Specification
Storage Temperature	-40°C to 70°C (-40°F to 158°F)
Operating Temperature	-20°C to 70°C (-4°F to 158°F)
Humidity	5% to 95% noncondensing
Altitude	0 to 3050 m (10000 ft.) without derating

Figure 2-1 Environmental Specifications

Enclosure Type	Amps	Load Center	Shipping Weight kg	(lb.)
NEMA 1 (steel)	100	None	10	(22)
	100	16 spaces	19.5	(43)
	200	None	11	(24)
	200	24 spaces	20.4	(45)
NEMA 3R (aluminum)	100	None	8.2	(18)
	100	16 spaces	15	(32)
	200	None	9.1	(20)
	200	24 spaces	16	(35)
	200 SE †	None	17	(37)
	200 SE †	42 spaces	32	(70)
	400	None	54	(120)
	400 SE †	None	59	(130)
† SE = Service entrance model				

Figure 2-2 Transfer Switch Weights

2.3 Installation

NOTICE

Foreign material contamination. Cover the transfer switch during installation to keep dirt, grit, metal drill chips, and other debris out of the components. Cover the solenoid mechanism during installation. After installation, use the manual operating handle to cycle the contactor to verify that it operates freely. Do not use a screwdriver to force the contactor mechanism.

NOTICE

Hardware damage. The transfer switch may use both American Standard and metric hardware. Use the correct size tools to prevent rounding of the bolt heads and nuts.

Check the system voltage and frequency. Compare the voltage and frequency shown on the transfer switch nameplate to the source voltage and frequency. See Figure 2-3. Do not install the transfer switch if the voltage and frequency are different from the normal (utility) source voltage and frequency or the emergency source voltage and frequency shown on the generator set nameplate.

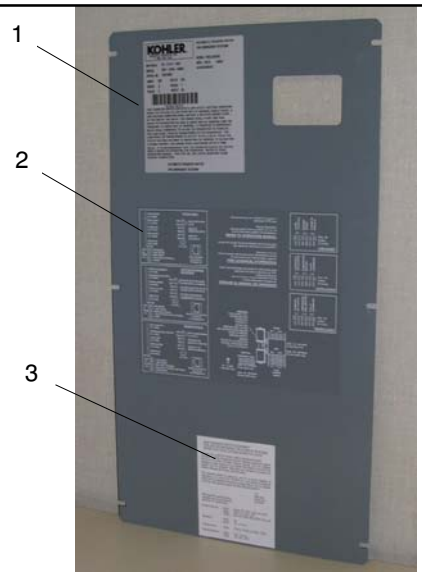

1. Nameplate
2. Connection instructions
3. Rating label

Figure 2-3 Enclosure Door or Inner Panel

Plan the installation. Use the dimensions given on the enclosure dimension (ADV) drawings in Section 7. Select a mounting site that complies with local electrical code restrictions for the enclosure type. Mount the transfer switch as close to the load and power sources as possible. Allow adequate space to open the enclosure and service the switch.

Wall mounting. Mount the transfer switch to a wall or other rigid vertical supporting structure. Use the template provided with 100 and 200 amp switches to locate the mounting holes in the wall. Level the template before marking and drilling the holes. For 400 amp switches, refer to the dimension drawing in Section 7 for hole locations.

Cover or remove the transfer switch's internal components to protect them from drill chips or debris during installation. Use a vacuum cleaner to remove debris from the enclosure. Tighten the mounting screws to 2.9 Nm (26 in. lb.) when reinstalling the components.

Note: Do not use compressed air to clean the switch. Cleaning with compressed air can cause debris to lodge in the components and cause damage.

Clearance holes through the back of each enclosure are provided for mounting. Use shims to plumb the enclosure.

NEMA 3R enclosures. To remove the enclosure's front panel, support the panel while removing the screws. Pull the bottom of the panel out and down until the top clears the enclosure. Remove the inner panel to access the transfer switch components.

100 and 200 amp NEMA 3R enclosures have locking tabs at the bottom of the enclosure and the door. While the enclosure is open, turn the locking tab out so that the door can be locked with a padlock after installation is complete.

Note: The mounting holes on NEMA 3R enclosures have gaskets to seal out moisture. Use washers with the mounting screws to protect the gaskets.

Recessed mounting. All 100 amp NEMA 1 enclosures and 200 amp NEMA 1 enclosures without the load center can be recess-mounted between 16 in. O.C. wall studs.

Remove the ATS components from inside the enclosure to protect them from drill chips and debris. Drill four mounting holes in one side of the enclosure. Mark and drill matching mounting holes in the wall stud. The enclosures are 330.2 mm (13 in.) wide. Add a stud to provide support on both sides of the transfer switch, if desired.

Mount the transfer switch enclosure. Use a vacuum cleaner to remove debris from the enclosure. Reinstall the internal components and tighten the mounting screws to 2.9 Nm (26 in. lb.).

Bezel. The optional bezel can be used with recess-mounted units. After mounting the transfer switch, mount the bezel around the transfer switch using the six self-tapping screws included with the kit. Drywall anchors may be needed for screws that do not go into studs.

2.4 Manual Operation Check

DANGER

Hazardous voltage.
Will cause severe injury or death.

Disconnect all power sources before opening the enclosure.

Check the manual operation before energizing the transfer switch. Verify that the contactor operates smoothly without binding. Do not place the transfer switch into service if the contactor does not operate smoothly.

After checking the manual operation, place the contactor in the Normal (utility) position.

Manual Operation, 100 and 200 Amp Switches

Note: Never manually operate the transfer switch when the power is connected. Disconnect both power sources before manually operating the switch.

1. Move the handle up to place the transfer switch in the Normal Source position and down to place the contactor in the Emergency Source position. See Figure 2-4.
2. Move the handle up to place the transfer switch in the Normal Source position for normal operation.

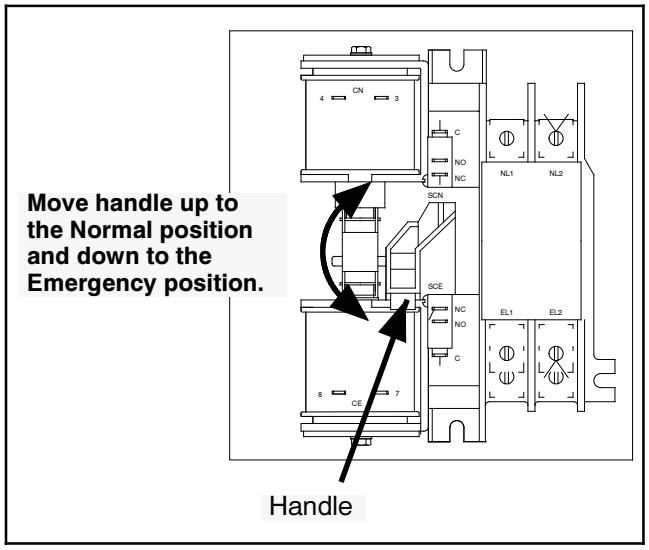

Figure 2-4 Manual Operation, 100 and 200 Amp Switches

Manual Operation, 400 Amp Switches

Note: Never manually operate the transfer switch when the power is connected. Disconnect both power sources before manually operating the switch.

1. Check the contactor position, indicated by the A and B position indicators. See Figure 2-5. One position indicator will display ON to indicate the source position. A is utility power and B is the generator set.
2. Slide the manual operating handle (provided with the switch) over the shaft on the left side of the switch. See Figure 2-5 and Figure 2-6.

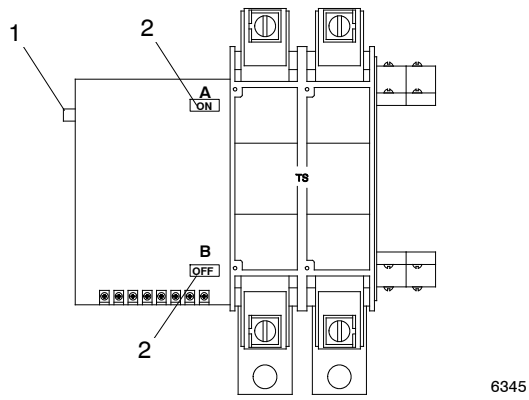

1. Shaft. Attach manual operating handle here.
2. Position indicators (A=Utility, B=Generator)

Figure 2-5 400 Amp Contactor

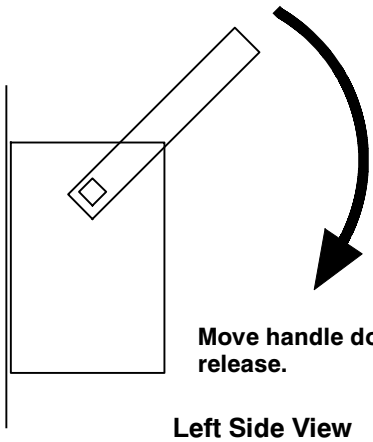

Figure 2-6 Manual Operation, 400 Amp

3. Move the manual operation handle down and then release the handle. Verify that the desired source position indicator displays ON.
4. Place the transfer switch in position A (utility).
5. Remove the manual operation handle and store it in a convenient location.

2.5 Electrical Wiring

The connection drawings in Figure 2-8 and Figure 2-9 show examples of essential load and whole-house configurations. Figure 2-10 and Figure 2-11 show service entrance model connections.

All wiring must comply with applicable national, state, and local electrical codes. Use separate conduit for AC power wiring and low-voltage DC, control, and communication system wiring.

⚠ DANGER

Hazardous voltage.
Will cause severe injury or death.

Disconnect all power sources before opening the enclosure.

Refer to the connection diagrams on the transfer switch enclosure door (see Figure 2-3) and the wiring diagrams in Section 7 during installation.

Making line or auxiliary connections. Hazardous voltage can cause severe injury or death. To prevent electrical shock deenergize the normal power source before making any line or auxiliary connections.

Grounding electrical equipment. Hazardous voltage can cause severe injury or death. Electrocution is possible whenever electricity is present. Ensure you comply with all applicable codes and standards. Electrically ground the generator set and related equipment and electrical circuits. Turn off the main circuit breakers of all power sources before servicing the equipment. Never contact electrical leads or appliances when standing in water or on wet ground because these conditions increase the risk of electrocution.

2.5.1 Load Center Circuit Breakers

The ATS load center uses Square D type QO breakers. Up to 8 type QOT tandem breakers can also be used. In an essential load application, the breakers can be moved from the main panel to the load center if the main distribution panel uses the same type of breakers. Otherwise, obtain and install new Square D type QO circuit breakers. The rating of the load center circuit breaker must match the rating of the existing breaker in the main panel for each circuit. If circuit breakers are removed from the load panel, install cover plates over the vacant positions. Cover plates can be obtained from a local Square D supplier.

Verify that the total rating for all breakers used in the load center does not exceed the rating of the transfer switch.

2.5.2 AC Power Connections

Determine the cable size. Refer to Figure 2-7 to determine the cable size required for the transfer switch. Make sure the lugs provided are suitable for use with the cables being installed.

Cable Sizes				
AL/CU UL-Listed Solderless Screw-Type Terminals for External Power Connections				
Switch Size, Amps	Range of Wire Sizes, Cu/Al			
	Normal and Emergency (per phase)	Load (per phase)	Neutral	Ground
100	(1) #14 to 1/0 AWG	(1) #14 to 1/0 AWG	(3) #12 to 250 KCMIL (Cu) or (3) #10 to 250 KCMIL (Al)	(9) #14 to #4 AWG
100 B	(1) #14 to 1/0 AWG	(1) #14 to 1/0 AWG	(1) #6 to 2/0 AWG	(9) #14 to #4 AWG
200	(1) #6 AWG to 250 KCMIL	(1) #6 AWG to 250 KCMIL	(3) #12 to 250 KCMIL (Cu) or (3) #10 to 250 KCMIL (Al)	(9) #14 to #4 AWG
200 B	(1) #6 AWG to 250 KCMIL	(1) #6 AWG to 250 KCMIL	(1) #4 AWG to 250 KCMIL	(9) #14 to #4 AWG
200 BSE	(1) #4 AWG to 250 KCMIL	(1) #4 AWG to 250 KCMIL	(3) #12 to 250 KCMIL (Cu) or (3) #10 to 250 KCMIL (Al)	(4) #14 to #1/0 AWG
200 SE	(1) #4 AWG to 300 KCMIL	(1) #6 AWG to 250 KCMIL	(3) #12 to 250 KCMIL (Cu) or (3) #10 to 250 KCMIL (Al)	(3) #14 to #1/0 AWG
400	(2) #1/0 AWG to 250 KCMIL or (1) #4 AWG to 600 KCMIL	(2) #1/0 AWG to 250 KCMIL or (1) #4 AWG to 600 KCMIL	(6) #1/0 AWG to 250 KCMIL or (3) #4 AWG to 600 KCMIL	(3) #6 to 3/0 AWG
400 SE	(2) #1/0 AWG to 250 KCMIL	(2) #1/0 AWG to 250 KCMIL or (1) #4 AWG to 600 KCMIL	(6) #1/0 AWG to 250 KCMIL or (3) #4 AWG to 600 KCMIL	(3) #6 to 3/0 AWG
B = Load center model SE = Service entrance model				

Figure 2-7 Cable Sizes

Conduit. Use the knock-outs provided in the enclosure for cables. Use separate conduit for AC power wiring and low-voltage DC, control, and communication system wiring. Watertight conduit hubs may be required for outdoor use.

For the SE model conduit hub, thread sealant must be applied to screw threads if screws are removed or replaced.

Select the proper cable clamp or use other approved methods for securing the cable or conduit to the enclosure.

Connect the source and load cables. Clean cables with a wire brush to remove surface oxides before connecting them to the terminals. Apply joint compound to the connections of any aluminum conductors.

Refer to the connection diagrams on the transfer switch enclosure door (see Figure 2-3) and the wiring diagrams in Section 7.

Connect the Normal source (typically the utility power) to the lugs labeled NA and NB. Connect the Emergency source (typically the generator set) to the lugs labeled EA and EB.

For service entrance models, connect the utility source to the lugs on the normal source disconnect circuit breaker as shown in the service entrance switch wiring diagram in Section 7.

On models without built-in load centers, connect the load to the lugs labeled LA and LB.

On models with built-in load centers, the LA and LB lugs are factory-wired to the load center. Connect the load leads to the circuits in the load center and tighten the connections. Check the labels on the breakers for the tightening torques.

Connect the neutral from the main panel to the neutral lug in the ATS enclosure.

Note: The neutral connection is required for transfer switch operation.

Ground the system according to NEC and local codes.

Verify that all connections are consistent with drawings before tightening the lugs. Tighten all cable lug connections to the torque values shown on the label on the switch. Carefully wipe off any excess joint compound after tightening the terminal lugs.

2.5.3 Neutral Bonding Jumper, Service Entrance Models

Service entrance transfer switches are shipped with the neutral-to-ground jumper connected. For non-service entrance applications, disconnect the neutral-to-ground bonding jumper. See the transfer switch dimension drawing.

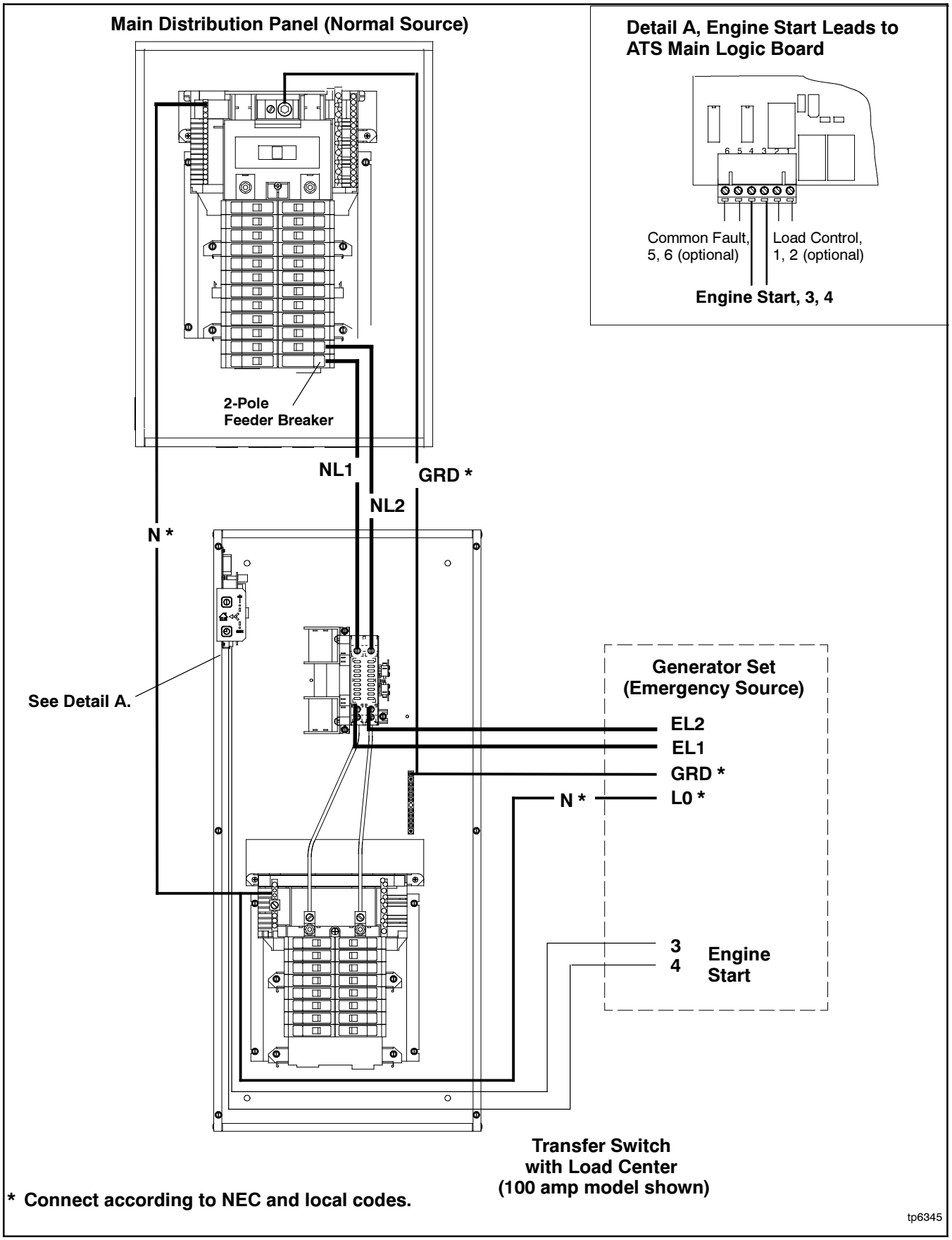

Figure 2-8 Connection Diagram, Load Center Models, Essential Loads Configuration

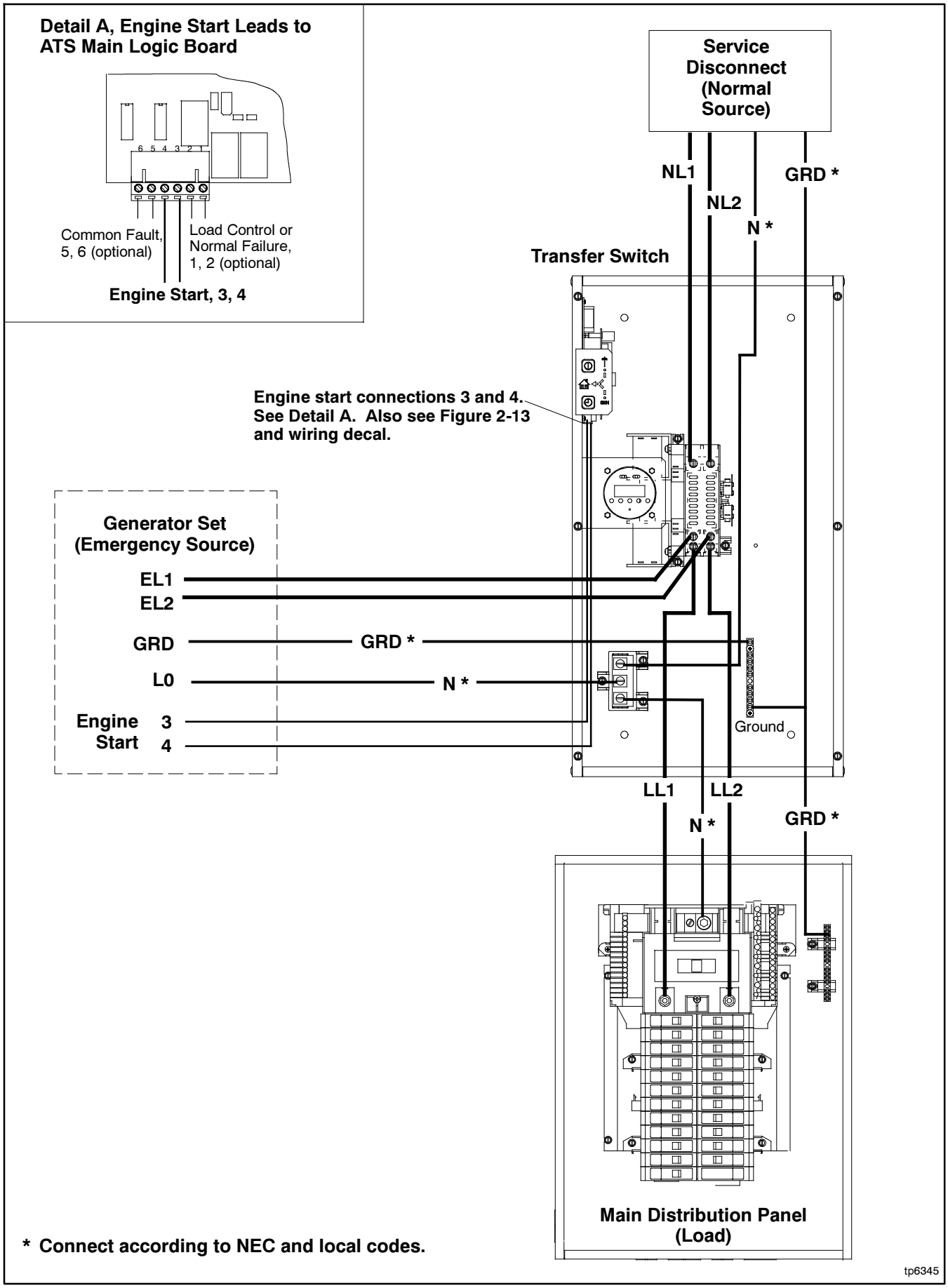

Figure 2-9 Connection Diagram, Transfer Switch without Load Center, Whole-House Configuration

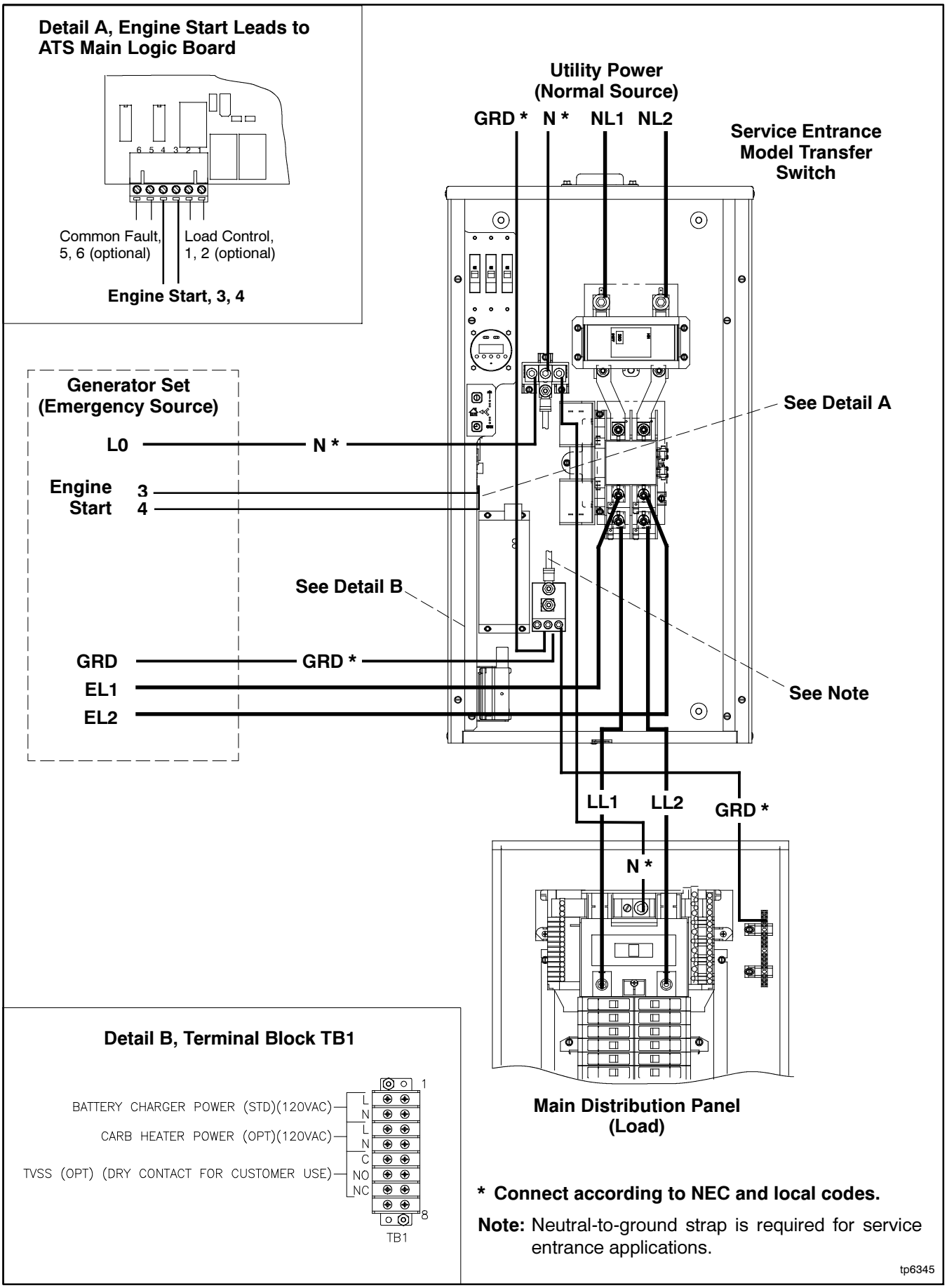

Figure 2-10 Connection Diagram, 200 Amp Service Entrance Model Transfer Switch

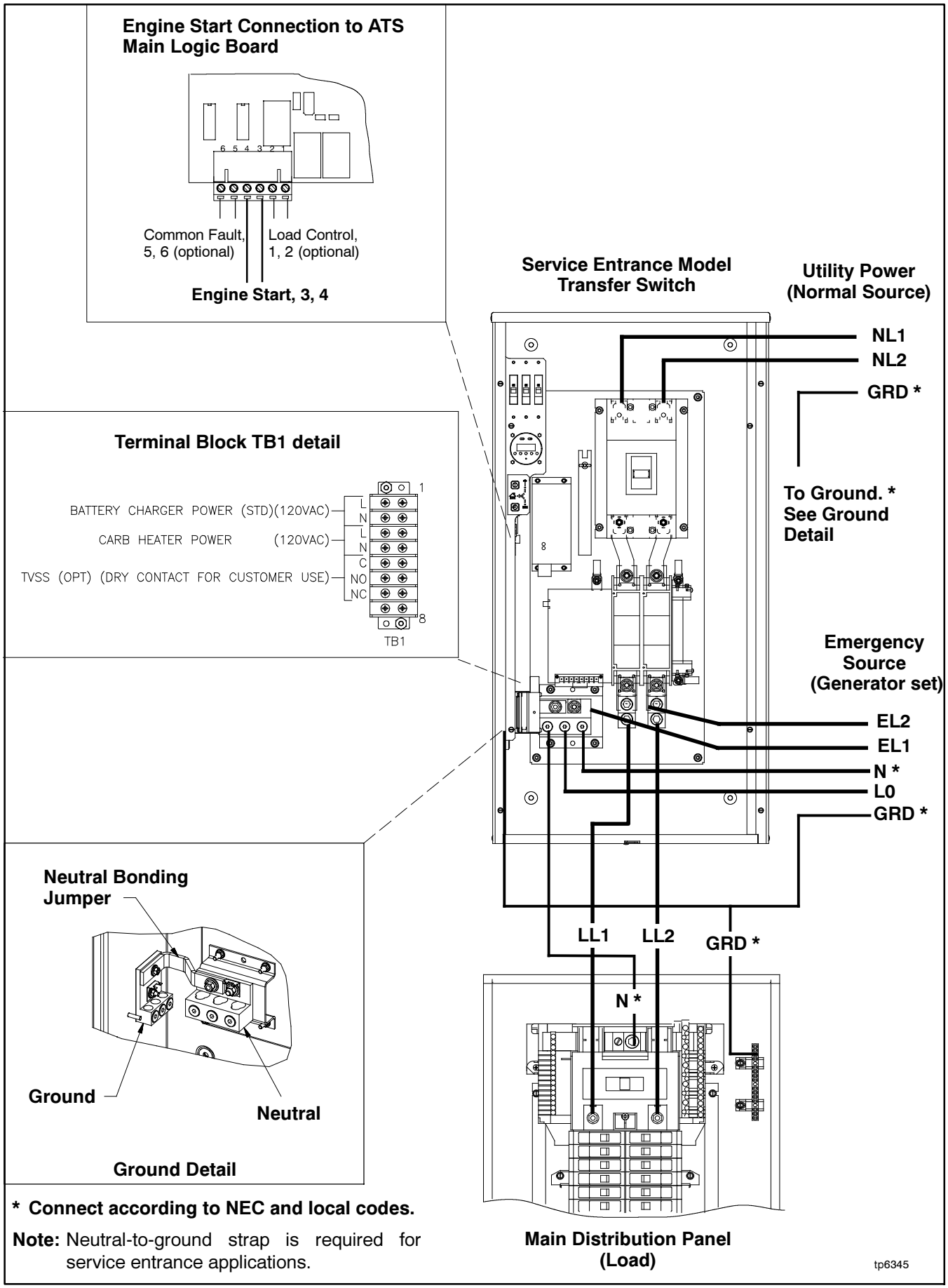

*** Connect according to NEC and local codes.**

Note: Neutral-to-ground strap is required for service entrance applications.

Figure 2-11 Connection Diagram, 400 Amp Service Entrance Model Transfer Switch

2.6 Controller Connections

See Figure 2-12 and the wiring diagrams in Section 7 for controller connections.

2.6.1 Engine Start Connections

⚠ WARNING

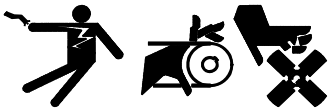

Accidental starting.
Can cause severe injury or death.

Disconnect the battery cables before working on the generator set. Remove the negative (–) lead first when disconnecting the battery. Reconnect the negative (–) lead last when reconnecting the battery.

Disabling the generator set. Accidental starting can cause severe injury or death. Before working on the generator set or connected equipment, disable the generator set as follows: (1) Move the generator set master switch to the OFF position. (2) Disconnect the power to the battery charger. (3) Remove the battery cables, negative (–) lead first. Reconnect the negative (–) lead last when reconnecting the battery. Follow these precautions to prevent starting of the generator set by an automatic transfer switch, remote start/stop switch, or engine start command from a remote computer.

Connect the engine start leads from the generator set to terminals 3 and 4 on the green 6-pin connector labeled P2 on the controller's main logic board. See Figure 2-12 for the location of the engine start contacts and V for connection details. See Figure 2-15 for contact ratings and wire size information.

Note: Be sure to connect the engine start leads to the *green* connector on the *main logic board*. The optional accessory board has a similar black 6-pin connector that is used for other input and output connections.

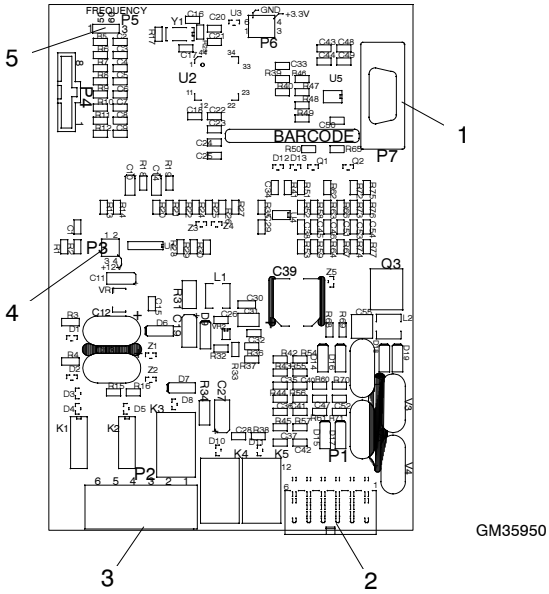

1. RS-232 connection (used to load controller application code)
2. Contactor harness connection P1
3. Customer connection terminal P2 (green):
   Load control or normal failure output
   Engine start
   Common fault output
4. Accessory board connector P3
5. Frequency shunt (jumper) P5

Figure 2-12 Controller Board Connections

Connection Detail, Engine Start Leads to ATS Main Logic Board P2

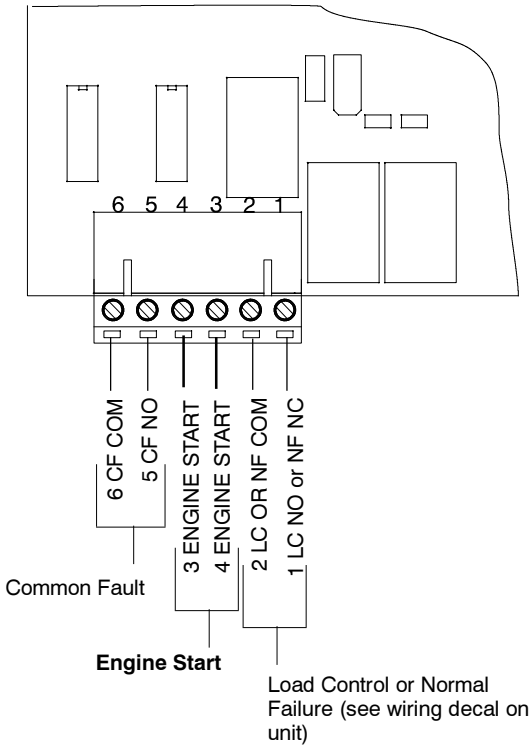

Figure 2-13 Engine Start Connection Detail

2.6.2 Optional Controller Connections

The green 6-pin connector P2 on the controller's main logic board provides connection points for optional common fault and load control or normal failure circuits. See Figure 2-12 for the connector location and Figure 2-13 for connection details. See Figure 2-15 for contact ratings, connection, and wire size information.

Load Control Contact. Normally open (NO) contact provided on most models; see the wiring decal on the unit. Provides a delayed contact closure to allow startup of selected loads 5 minutes after transfer to the emergency power source (generator set). Use this contact to delay startup of equipment with large motor-starting loads such as air conditioners.

The optional accessory board allows you to change the load control time delay to 10 minutes. See Section 4.1.

Normal Failure Contact. Normally-closed (NC) contact provided on models equipped with controller board GM41597 only; see the wiring diagram decal on the unit. This contact opens when the normal source is available and closes when the normal source is lost.

Common Fault Contact. The normally open contact closes and latches on the following conditions:

- Failure to transfer
- Position-indicating auxiliary contact fault
- Failure to acquire emergency source

Connect customer-supplied equipment such as an indicator lamp or alarm horn to the common fault connections on connector P2. See Section 3.3 for fault information.

The faults must be reset to open this contact after a fault condition. See Section 3.4 for instructions to reset faults.

2.6.3 Frequency Selection

The transfer switch frequency is set by a programming shunt (jumper) on P5 on the main logic board. See Figure 2-12 for the jumper location. Position the jumper as indicated in Figure 2-14 for 50 or 60 Hz.

Frequency	P5 Jumper Position
50 Hz	P5-1 to P5-2
60 Hz	P5-2 to P5-3

Figure 2-14 Frequency Jumper Positions

Description	Terminals	Contact Rating	Wire Size	Tightening Torque	Max. Distance
Load Control	P2-1 and P2-2	10 A @ 120 VAC Normally open (NO)	#12–24 AWG	0.8 Nm (7 in. lb.)	213 m (700 ft.)
Normal Failure (control board GM41597 only)	P2-1 and P2-2	10 A @ 120 VAC Normally closed (NC)	#12–24 AWG	0.8 Nm (7 in. lb.)	213 m (700 ft.)
Engine Start	P2-3 and P2-4	0.5 A @ 125 VAC; 2 A @ 30 VDC Normally closed (NC)	#12–24 AWG	0.8 Nm (7 in. lb.)	213 m (700 ft.)
Common Fault	P2-5 and P2-6	0.5 A @ 125 VAC; 2 A @ 30 VDC Normally open (NO), latches closed	#12–24 AWG	0.8 Nm (7 in. lb.)	213 m (700 ft.)

Figure 2-15 Controller Main Logic Board Customer Connections (P2)

2.7 Accessory Connections

Factory-installed accessories may require power, input, and output connections. Refer to the following sections and Section 4 for instructions to connect optional accessories. Check settings on optional accessories as described in the following sections.

2.7.1 Auxiliary Contacts (Optional)

Optional auxiliary contacts provide one set of contacts that close when the transfer switch is in the Normal position and one set of contacts that close when the transfer switch is in the Emergency position. Use 1/4 in. fast-on connectors to connect the auxiliary contacts to customer-supplied alarms, remote indicators, or other devices. See Figure 2-16 for the contact rating.

The auxiliary contacts are located on the right side of the contactor. See Figure 2-18.

The 400 amp models are equipped with one set of auxiliary contacts as standard equipment.

Description	Contact Rating
Auxiliary Contacts	15 A @ 277 VAC Form C

Figure 2-16 Auxiliary Contact Rating

2.7.2 Accessory Board

If the accessory board is installed, check the DIP switches and time delay settings and set them to the desired values. See Section 4.1.

A remote start/stop (remote test) switch and an external exerciser can be connected to the accessory board. See Section 4.1.3 for input and output connection instructions.

2.7.3 External Alarm Module (EAM)

Use category 5 network cable to connect the optional EAM (if used) to the accessory board. See Section 4.2. The accessory board is required for connection and operation of the EAM.

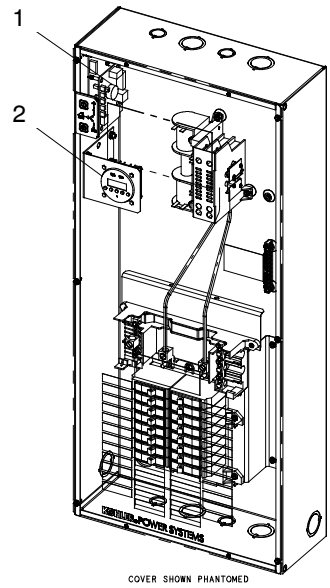

1. Accessory board (optional)
2. Programmable exerciser (optional)

Figure 2-17 Optional Accessory Locations, Typical

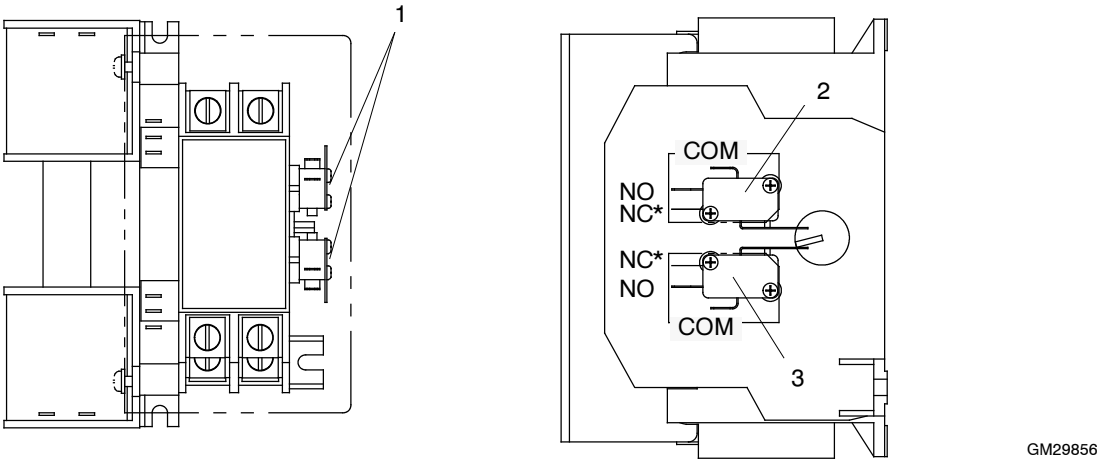

* NC contact provided on some switches

1. Auxiliary contacts
2. Normal
3. Emergency

Figure 2-18 Optional Auxiliary Contacts, Typical

2.7.4 SE Model Battery Charger Circuit Breaker Connection

The SE model transfer switch has a 15-amp single-pole circuit breaker for the generator set battery charger. The circuit breaker (CB1) is factory-wired to the accessory connection terminal block TB1. Connect the battery charger power connection to the accessory connection terminal block. For connections, see Figure 2-19 or the wiring diagrams in Section 7, Diagrams and Drawings. See Figure 2-20 for the terminal block location.

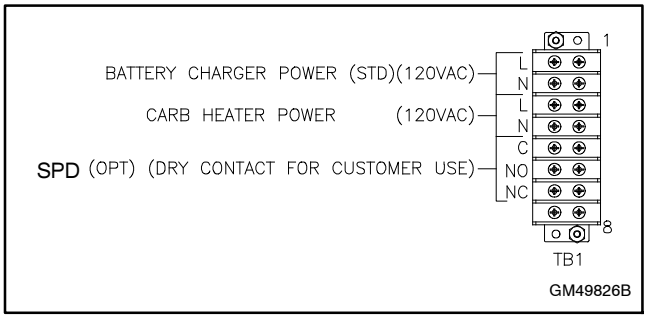

Figure 2-19 Accessory Connection Terminal Block, SE Model Only

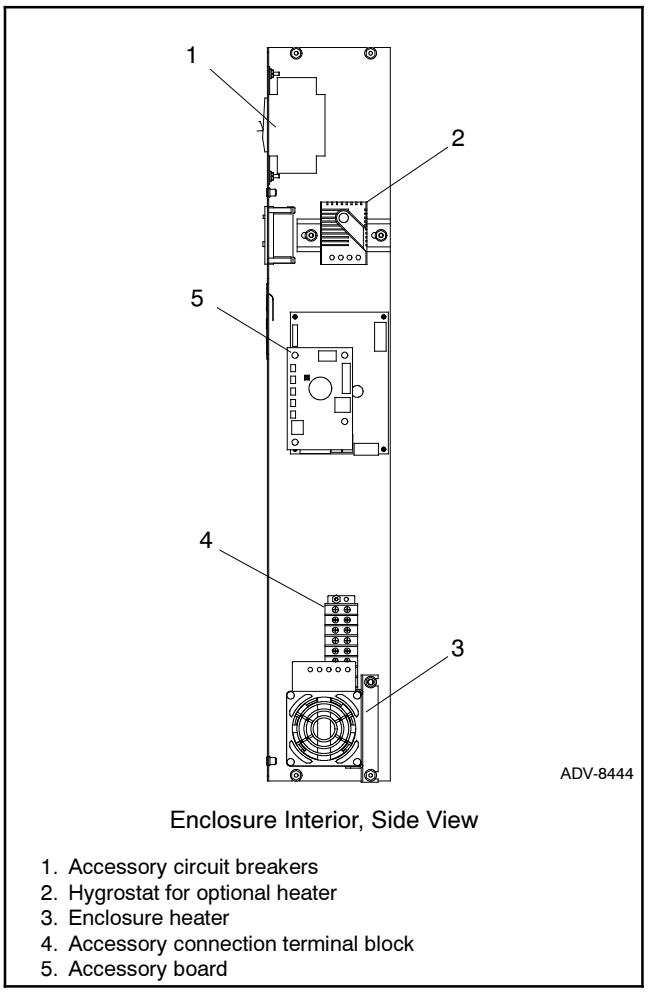

Figure 2-20 SE Model Accessory Locations, Typical

2.7.5 SE Model Accessory Connections

See Figure 2-20 or the dimension drawings in Section 7 for the locations of optional accessories.

The following connections can be made to accessory connection terminal block TB1. See Figure 2-20 for the terminal block location.

Engine Heater. Engine heater circuit breaker CB2 is a 15-amp single-pole circuit breaker. CB2 is optional on 200 Amp SE models and standard on 400 Amp SE models.

If the generator set is equipped with a carburetor heater, connect the heater power to engine heater circuit breaker CB2 through terminal block TB1. See Figure 2-20 for the terminal block location. For connections, see Figure 2-19 or the transfer switch wiring diagram in Section 7, Diagrams and Drawings.

SPD Remote Indicator. An indicator for the optional surge protective device (SPD) can also be connected to the accessory connection terminal block. The SPD provides for remote monitoring via a normally open (NO) or normally closed (NC) circuit. The contact changes state when the SPD module needs replacement.

Connect customer-provided indicators or alarms to the SPD auxiliary contact terminals (Normal and Emergency) on terminal block TB1 to provide remote indication when the SPD needs to be replaced. See Figure 2-21 for the contact rating. See Figure 2-19 or the service entrance transfer switch wiring diagram in Section 7, Diagrams and Drawings, for connections.

Description	Contact Rating
SPD Remote Indication Contact	2 A @ 250 VAC

Figure 2-21 Contact Rating

Enclosure Space Heater. The enclosure space heater, if installed, is factory-wired to circuit breaker CB3 through terminal block TB1. Check the temperature and humidity settings on the space heater control. See Section 4.4.3 for recommended settings.

2.8 Operation Test

Use the procedure below to run the transfer switch's test sequence. Loaded or unloaded test sequences can be run. The test sequence starts the generator set, and, for a loaded test, transfers the load to the emergency source. When the test ends, the transfer switch transfers the load back to the normal source and removes the engine start signal.

Refer to Section 3.5 for a description of the transfer switch sequence of operation.

Note: If the generator set fails during a test, the ATS will immediately attempt to transfer to the normal (utility) source.

Note: Install the front panel(s) or close and lock the enclosure door before starting the test procedure.

⚠ DANGER

Hazardous voltage.
Will cause severe injury or death.

Only authorized personnel should open the enclosure.

Test Procedure

1. Check the controller LED indicators to verify that the Utility Source Available and Utility Source Position indicators are lit. See Figure 3-1.

2. Verify that the generator set master switch is in the AUTO position.

3. Run a loaded or unloaded test as described below:

   a. **Loaded Test:** Press and hold the TEST button on the controller for 6 seconds to start a loaded test. The GEN Source and Position LEDs flash to indicate that the ATS controller is set up to transfer the load during the test.

   b. **Unloaded Test:** To start the generator set without transferring the load, hold the TEST button for 3 to 5 seconds. The GEN Position LED flashes to indicate an unloaded test.

4. Verify that the generator set engine starts and the GEN Available LED flashes.

5. For a loaded test, the switch transfers the load to the emergency source (generator set). Verify that the Utility Source Position LED goes out and the GEN Position LED lights.

6. Press and hold the Test button for 2 seconds to end the test.

7. The switch transfers the load to the normal (utility) source. Verify that the GEN Position LED goes out and the Utility Position LED lights.

   Note: The retransfer time delay does not operate during the test sequence.

8. After the engine cooldown time delay, the generator set shuts down.

   Note: The generator set may have an additional engine cooldown time delay that causes the engine to run after the transfer switch engine start signal is removed.

2.9 Exerciser Setup

The generator set must be in automatic mode for exerciser operation. Refer to the generator set operation manual for instructions to put the generator set in AUTO.

2.9.1 Standard Exerciser

Follow the instructions below to set the exercise timer to automatically start and run the generator set for 20 minutes every week. The exerciser can be set for loaded or unloaded exercise runs. The factory settings for the exerciser are summarized in Figure 2-22.

Exerciser	
Parameter	**Setting**
Frequency	Weekly
Duration	20 minutes
Unloaded/ Loaded	Unloaded: Hold Exercise button for 3–5 seconds. Loaded: Hold Exercise button for 6+ seconds.
Note: The optional accessory board allows adjustment of these parameters. See Section 4.1.5.	

Figure 2-22 Exerciser Settings

Pressing and holding the Exercise button will start an exercise run and set the exercise timer as described below. The exercise time and day are set to the time that the Exercise button is pushed. The exerciser will run at the same time on the same day each week.

While the generator set is running during an exercise period, the exercise can be ended early by pressing and holding the exercise button for 2 seconds. Ending the current exercise period early does not affect future exercise runs.

Unloaded exercise. The generator set runs, but the electrical load is not transferred. Press and hold the Exercise button for approximately 3 seconds until the GEN Available LED flashes to start an unloaded exercise and set the time and date of the next exercise run. The GEN available LED continues to flash throughout the exercise run to indicate an unloaded exercise. The generator set stops automatically after 20 minutes.

Loaded Exercise. The generator set runs and the ATS transfers the electrical load to the generator set. Hold the button for at least 6 seconds until the GEN available and GEN position LEDs flash to start a loaded exercise and set the time and date of the next exercise run. The GEN available and GEN position LEDs continue to flash throughout the exercise run to indicate a loaded exercise. After 20 minutes, the ATS transfers the load back to normal. The generator set stops automatically after the engine cooldown time delay.

Resetting the Exerciser. After the exerciser has been set, pressing and holding the Exercise button to start an exercise run at a different time resets the exerciser to that new time and day.

Clearing the Exercise Setting. If it is necessary to clear the exercise setting on the ATS controller, press and hold both the Exercise and Test buttons for at least 6 seconds.

Exercise with the RDC/DC or RDC2/DC2 Generator Set Controller

Note: When the RDT transfer switch is used with the generator sets equipped with the Kohler® Model RDC, DC, RDC2, or DC2 controller, it is possible to have two exercise settings (one set at the generator set controller, and one set at the ATS controller). If the exercise times overlap, the ATS exercise setting takes priority.

The RDC/DC and RDC2/DC2 generator set controllers allow the programming of an unloaded exercise at the generator set controller.

If the RDT transfer switch is used with a generator set with one of the controllers listed above and the unloaded exercise is set on the generator set controller, clearing the exercise on the RDT ATS controller is recommended.

2.9.2 Exerciser Options

The optional accessory board provides the option of biweekly exercise runs, adjustable exercise run duration from 5 to 50 minutes, and selection of loaded or unloaded exercises. See Section 4.1.

The optional programmable exercise timer provides more flexibility in programming additional exercise periods of different duration. See Section 4.3.

2.10 Warranty Registration

Startup Notification Form. The Startup Notification Form covers all equipment in the standby system. Complete the Startup Notification Form and register the equipment using the Kohler online Warranty Processing System within 60 days of the initial startup date. Standby systems not registered within 60 days of startup are automatically registered using the manufacturer's ship date as the startup date.

Notes

3.1 Introduction

Red and green LEDs on the transfer switch controls indicate which sources are available, show which source is connected to the load, and flash to indicate fault conditions. Pushbuttons allow you to start and stop the generator set and set the exercise timer. See Figure 3-1.

The transfer switch uses fixed settings for time delays, voltage and frequency pickup and dropout, and other system settings. An optional accessory board allows changes to the time delays and exerciser settings and provides connections for remote test and remote exercise inputs. See Section 4.1 for information on the accessory board.

3.2 Controls

The controller's user interface panel is accessible through an opening in the transfer switch cover (the inner panel on NEMA type 3R enclosures). Figure 3-1 explains the operation of the controller pushbuttons and LED indicators.

The LEDs light steadily or flash to indicate different ATS conditions as shown in Figure 3-2. See Section 3.3 for more information on fault conditions.

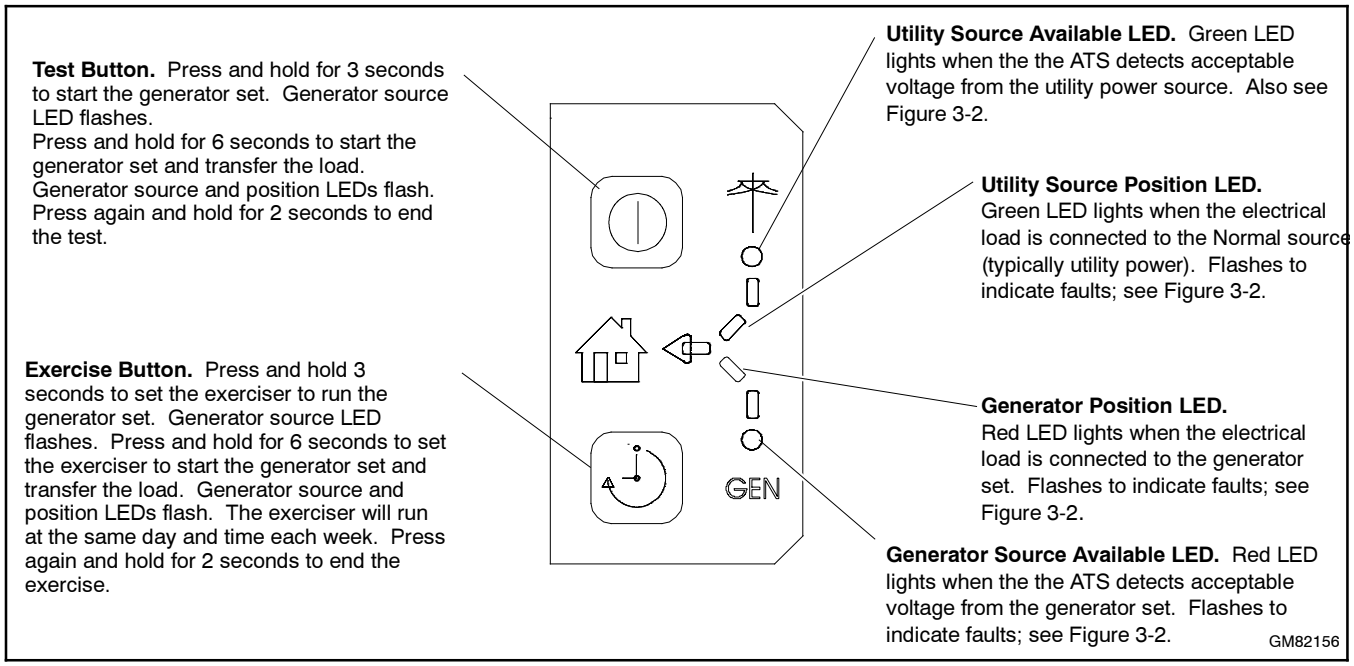

Figure 3-1 User Interface Panel

Condition	LED Indication
Utility source power available	Utility Source Available LED lights steadily.
Load connected to utility power	Utility Source Position LED lights steadily.
Generator set power available	GEN Source Available LED lights steadily.
Load connected to the generator set	GEN Position LED lights steadily.
Loaded test	GEN Available and GEN Position LEDs flash on 1 second, off 1 second.
Unloaded test	GEN Available LED flashes on 1 second, off 1 second.
Loaded exercise	GEN Available and GEN Position LEDs flash on 0.5 second, off 2 seconds.
Unloaded exercise	GEN Available LED flashes on 0.5 second, off 2 seconds.
Failure to acquire standby source fault	GEN Available LED flashes 2 times/second.
Failure to transfer fault	GEN or Utility Source Position LED flashes 2 times/second.
Auxiliary switch failure fault	GEN Position and Utility Source Position LEDs flash alternately 2 times/second.

Figure 3-2 LED Indication

3.3 Faults

The LEDs on the controller's user interface flash as shown in Figure 3-2 to indicate various fault conditions. Contact an authorized distributor/dealer for service if the fault persists.

3.3.1 Failure to Acquire Emergency Source Warning

The Failure to Acquire Emergency Source fault occurs if the transfer switch does not sense voltage from the generator set within 78 seconds after signaling the generator set to start. Check the generator set operation and the connections from the generator set to the ATS in the case of this fault.

The Failure to Acquire Emergency Time Delay is set for 78 seconds to allow for three 15-second engine cranking cycles plus 15 seconds rest between starting attempts.

The fault clears when the system acquires the emergency source.

3.3.2 Failure to Transfer Warning

The Failure to Transfer warning occurs if a signal to transfer is sent to the contactor and the position-indicating contacts do not indicate a complete transfer.

The controller will attempt to transfer three times before indicating the fault. If the transfer switch is in the Normal position, the Engine Cooldown time delay is executed and then the engine start contacts open to stop the generator set.

Reset the controller to clear the fault condition. See Section 3.4.

3.3.3 Auxiliary Switch Fault

An Auxiliary Switch fault occurs if the position-indicating contacts indicate that the ATS position changed when no transfer was called for. If the transfer switch is in the Normal position, the Engine Cooldown time delay is executed and then the engine start contacts open to stop the generator set.

An Auxiliary Switch fault also occurs if both auxiliary switches are open or closed so that the controller is unable to determine the transfer switch position.

Reset the controller to clear the fault condition. See Section 3.4.

3.4 Controller Resetting

3.4.1 Fault Reset

Always identify and correct the cause of a fault condition before resetting the ATS controller. Press and hold the Exercise and Test buttons for approximately 3 seconds until the LEDs flash to clear faults and warnings. Warnings reset automatically with a change in the source availability or a signal to transfer.

Note: The Common Fault output remains closed until the faults are reset. See Section 2.6.2.

3.4.2 Controller Reset

Press and hold both buttons for 6 seconds to reset the controller to its original state at powerup, if necessary.

Note: Resetting the controller clears the exerciser setting. Set the exercise time and day as described in Section 2.9 after resetting the controller.

3.4.3 Alarm Silence

If the transfer switch is equipped with an optional accessory board, pressing both buttons will also silence the alarm horn.

3.5 Operation Sequence

3.5.1 Source Sensing

The transfer switch controller monitors the utility power source voltage, and initiates the transfer sequence if the source voltage falls below the voltage dropout setting. Retransfer is initiated when the utility source rises above the voltage pickup settings and remains stable for at least 6 minutes. See Figure 3-3.

- Single-phase voltage sensing on both sources, ±5%.
- Line-to-line frequency sensing on emergency (GEN) source, ±2%.

Source Sensing	
Undervoltage dropout	80%
Undervoltage pickup	85%
Underfrequency dropout *	90%
Underfrequency pickup *	96%
* Emergency (GEN) source only	

Figure 3-3 Source Sensing

3.5.2 Transfer Sequence

Figure 3-4 illustrates the transfer sequence when the normal source fails and Figure 3-5 illustrates the sequence when it returns. Time delays before load transfer prevent nuisance transfers during brief power interruptions. See Figure 3-6. Events such as the failure of the generator set to start can change the sequence of operation.

The Failure to Acquire Emergency Time Delay is set for 78 seconds to allow for three 15-second engine cranking cycles plus 15 seconds rest between starting attempts.

If the emergency source fails and the normal source is not available, the transfer switch controller powers down until one of the sources returns.

The optional accessory board allows time delay adjustments. See Section 4.1.

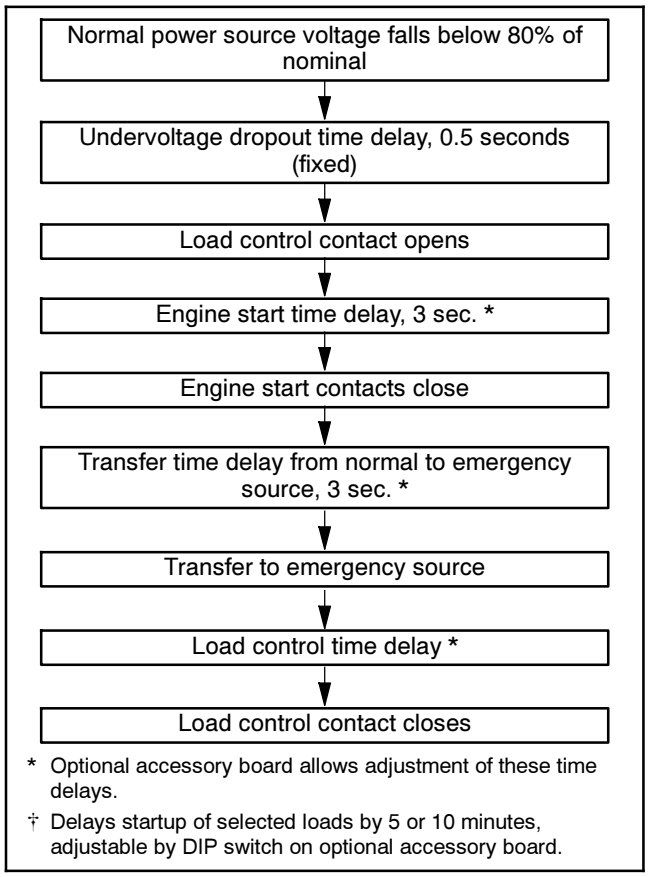

Figure 3-4 ATS Sequence of Operation, Transfer to Emergency

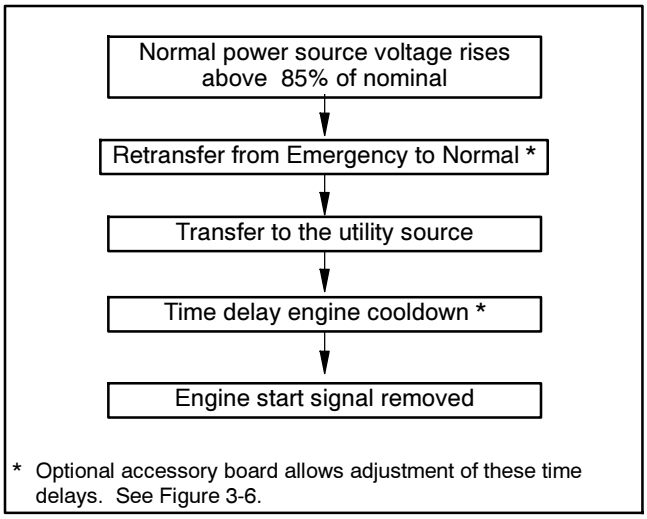

Figure 3-5 ATS Sequence of Operation, Retransfer to Normal

Time Delays			
Time Delay	Factory Setting	Adjustment with Accessory Board*	
		Range	Increment
Engine Start	3 seconds	1–10 seconds	1 second
Transfer from Normal to Emergency	3 seconds	1–10 seconds	1 second
Retransfer from Emergency to Normal	6 minutes	3–30 minutes	3 minutes
Engine Cooldown	5 minutes	1–10 minutes	1 minute
Failure to Acquire Emergency	78 seconds†	NA	
Exercise Time Duration	20 minutes	5–50 minutes	5 minutes
Load Control Time Delay	5 minutes	5 or 10 minutes (DIP switch)	
Undervoltage Dropout Time	0.5 second	NA	
Underfrequency Dropout Time	3 seconds	NA	

* Optional accessory board required for time delay adjustments. NA = not adjustable

† Allows for three 15-second crank attempts separated by two 15-second rest periods.

Figure 3-6 Time Delays

Notes

4.1 Accessory Board

The optional accessory board is mounted above the controller's main logic board. The accessory board kit is available factory-installed or as a loose kit. See Figure 2-17 and Figure 4-1 for the accessory board location.

The accessory board contains the following components:

- Audible alarm on system faults.
- Rotary switches for time delay adjustments.
- DIP switches for exercise, remote test switch operation, and load control functions.
- Connector for remote test input, programmable exerciser input, and generator set supplying load output.
- Connector for the optional External Alarm Module (EAM)

The accessory board is required if the External Alarm Module (EAM) is installed. See Section 4.2.

Note: Before opening the transfer switch enclosure to access the accessory board, open the circuit breakers to disconnect the power to the transfer switch.

4.1.1 Audible Alarm

The audible alarm sounds on the fault conditions shown in Section 3.3.

Always identify and correct the cause of the fault condition before resetting the controller. Press and hold the test and exercise pushbuttons on the controller to clear the fault and silence the alarm.

4.1.2 EAM Connection (P13)

Connect the optional External Alarm Module (EAM) to P13. See Figure 4-2 for the location of connector P13. See Section 4.2.2 for EAM connection instructions.

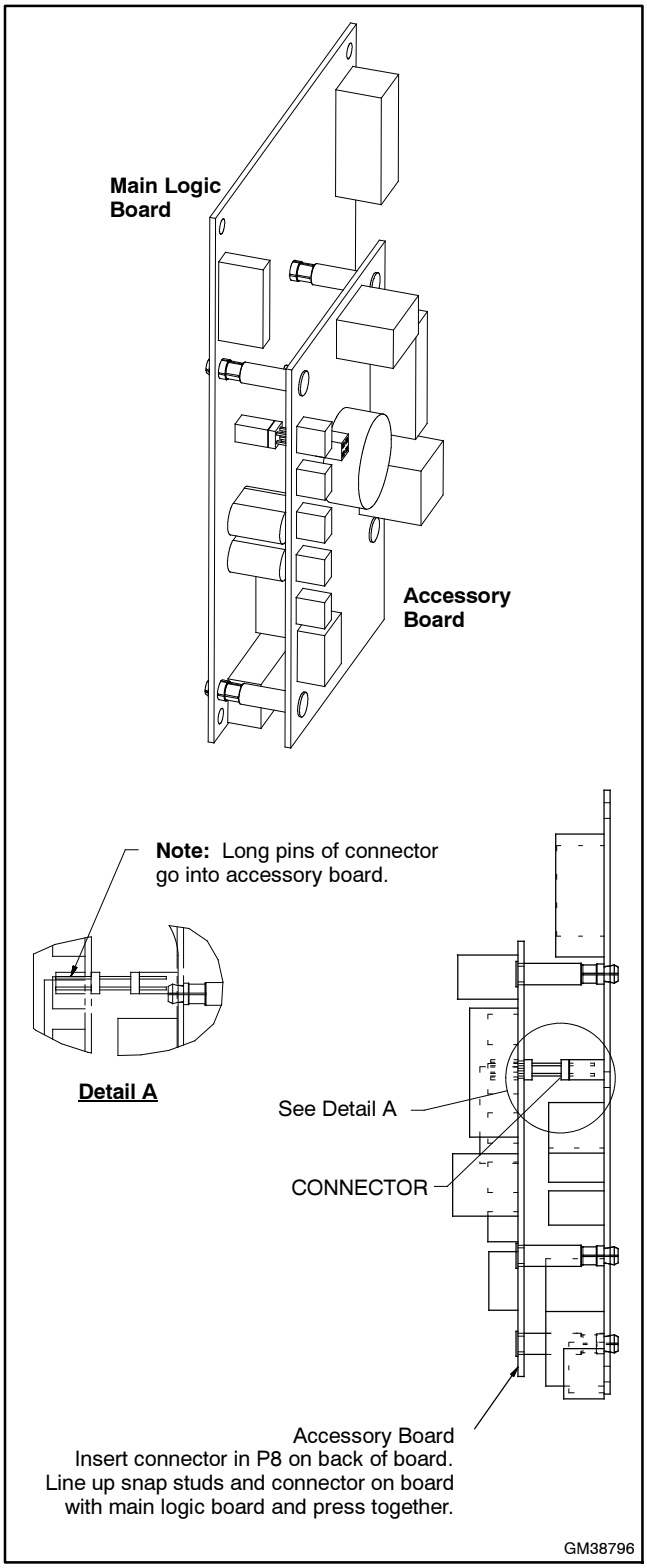

Figure 4-1 Accessory Board Installation

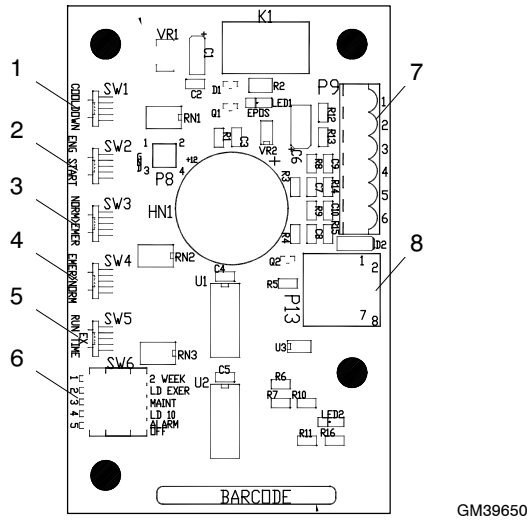

1. Engine cooldown time delay adjust SW1
2. Engine start time delay adjust SW2
3. Normal to emergency time delay adjust SW3
4. Emergency to normal time delay adjust SW4
5. Exercise run time adjust SW5
6. DIP switches SW6
7. Input/output connector P9 (black)
8. EAM connection P13

Figure 4-2 Accessory Board Component Locations

4.1.3 Inputs and Outputs (Connector P9)

A remote test switch and an external exerciser can be connected to the black 6-pin connector P9 on the accessory board. See Figure 4-2 and Figure 4-3. P9 also includes a generator set supplying load output connection.

Note: The ATS main logic board has a similar green 6-pin connector. Do not interchange the black and green mating connectors.

Connections. Connect input and output leads to connector P9. Refer to the label on the enclosure cover or Figure 4-3 for the connections. Use #12–24 AWG wire and tighten the connections to 0.5 Nm (4.4 in. lb.).

Remote Test Input. Connect a remote switch to this input for remote starting and stopping of a loaded test. DIP switch 3 affects the operation of this switch. See Section 4.1.5, Accessory Board DIP Switches, and Section 4.2, External Alarm Module.

Generator Set Suppling Load Output. This output provides a closed contact to indicate that the generator set is supplying the load when the transfer switch is in the Emergency position and the GEN source is available. Connect to customer-supplied equipment.

Remote Exercise Input. Connect the optional Programmable Exerciser to this input to allow scheduling of additional loaded or unloaded generator set exercise runs. DIP switch 2 affects the operation of this input. See Section 4.1.5, Accessory Board DIP Switches.

See Section 4.3 and TT-1403, Programmable Exerciser Instructions, for more information about the programmable exerciser.

Note: Always replace the cover before energizing the transfer switch controls.

Function	Terminals, Connector P9
Generator set supplying load output Contact rated 10 amps @ 120VAC	1 – 2
Remote exercise input	3 – 4
Remote test input	5 – 6

Figure 4-3 Accessory Board Inputs and Outputs

4.1.4 Time Delay Adjustment Switches

The 10-position rotary switches allow adjustment of the time delays shown in Figure 4-4. Use a small screwdriver or other small tool to increase or decrease the time delays within the range shown in the table. The rotary switch positions range from 1 to 10, with position 10 labeled 0 (zero).

The factory settings are the same as the controller time delays without the optional accessory board.

	Factory Setting		Adjustment with Accessory Board	
Time Delay	**Setting**	**Switch Position (1–10[0])**	**Range**	**Increment**
Engine Cooldown	5 minutes	5	1–10 minutes	1 minute
Engine Start	3 seconds	3	1–10 seconds	1 second
Transfer from Normal to Emergency	3 seconds	3	1–10 seconds	1 second
Retransfer from Emergency to Normal	15 minutes	5	3–30 minutes	3 minutes
Exercise Run Time	20 minutes	4	5–50 minutes	5 minutes

Figure 4-4 Accessory Board Time Delay Adjustments

4.1.5 DIP Switches

DIP switches on the optional accessory board control the exercise, remote test, and load control functions. The DIP switch location is shown in Figure 4-2. The DIP switch functions are summarized in Figure 4-5. Check the DIP switch settings and adjust if necessary for the application.

1 Week/2 Week Exercise. Switch 1. This switch controls the frequency for exercise runs that are set by pressing the Exercise button on the ATS controller. This switch does not affect exercise periods set through the optional programmable exerciser. If the setting is changed after the exerciser has been set, the new DIP switch setting becomes effective *after* the next exercise.

Loaded/Unloaded Exercise. Switch 2. This switch controls automatic exercise runs. The first exercise started by pressing the Exercise button on the controller is not affected by this switch. All subsequent automatic exercise runs will be loaded or unloaded according to this switch setting.

An unloaded exercise starts and runs the generator set. A loaded exercise starts the generator set and transfers the electrical load. See Section 2.9, Exerciser Setup, for more information.

Maintained/Momentary Test. Switch 3.

- With DIP switch 3 in the ON (maintained) position, close a remote test switch or contact to start and run the generator set. Open the remote contact to end the test and signal the generator set to stop.

  Set DIP switch 3 to ON if the EAM is connected.

- With DIP switch 3 in the OFF (momentary) position, hold the test switch for 1 second and release to start a test. The remote switch must be held closed for at least 1 second. Press the test switch again to stop the test and signal the generator set to stop.

  Note: Some generator sets may continue to run for an engine cooldown time period after receiving the remote stop signal.

Load Control. Switch 4. Sets the load control time delay to 5 or 10 minutes. See Section 2.6.2.

Alarm Enable. Switch 5. Enables or disables the alarm horn on the accessory board. If this switch is changed while the horn is sounding, allow several seconds for the change to register and the horn to stop.

Install the front panel(s) or close and lock the enclosure door before energizing the transfer switch.

Switch		Off (Open)	On (Closed)	Notes
1	2 Week Exercise	1 week	2 Weeks	For the exercise button on the controller's user interface.
2	Loaded Exercise	Unloaded	Loaded	For automatic exercise runs set at the controller (excluding the first exercise) or set on the optional programmable exercise timer.
3	Maintained Test	Momentary	Maintained	For an optional remote switch, such as the start/stop switch on the EAM.
4	Load Control	5 Minutes	10 Minutes	For delayed connection of selected large loads to the generator set.
5	Alarm	Alarm Disabled	Alarm Enabled	For the alarm horn on the accessory board (inside the ATS enclosure). Does not affect the alarm horn on the External Alarm Module.

Figure 4-5 Accessory Board DIP Switches

4.2 External Alarm Module (EAM)

The optional External Alarm Module (EAM) is illustrated in Figure 4-6. The EAM:

- Allows remote starting and stopping of the generator set and load transfer.
- Provides remote indication that the generator set is supplying the load.
- Provides remote indication of the system faults listed in Section 3.3.

The EAM can be installed indoors up to 152 m (500 ft.) away from the generator set.

Note: The optional accessory board is required for EAM connection and operation.

The EAM is powered through the accessory board. The EAM also contains a rechargeable battery that powers the module for up to 1 hour when no power is available. The battery recharges in place when the power returns. See TT-1416, Installation Instructions, provided with the EAM for more information.

1. Fault LED
2. Alarm silence button
3. Generator set supplying load LED
4. Test (start/stop) button

Figure 4-6 External Alarm Module (EAM)

4.2.1 Installation

Locate the EAM indoors in a convenient location up to 152 m (500 ft.) from the transfer switch. The EAM is designed for indoor installation only. Mount the EAM in a standard 21 cu. in. utility box with standard GFCI cover (not provided with kit).

Set DIP switch 3 on the accessory board to the ON (maintained) position. See Section 4.1.5.

4.2.2 Connection

Use Category 5 straight networking cable with RJ45 connectors to connect P10 on the EAM circuit board to connector P13 on the accessory board. Cable is not supplied with the accessory kit; obtain the length of cable required for the application locally. Use a maximum cable length of 152 m (500 ft.).

4.2.3 EAM Operation

See Figure 4-6 for an illustration of EAM buttons and indicators.

Test (start/stop) button. Press and hold the Test (Start/Stop) button until the GEN LED flashes (approximately 1 second) to start the generator set and transfer the load. If no power source is available, the EAM will attempt to start the generator set until the EAM battery discharges (10–15 seconds).

Press and hold the button until the GEN LED flashes again to transfer back to the utility source and stop the generator set. Pressing the test button will not stop the generator set if utility power is not available.

Note: The operation of the Test button is affected by the Maintained/Momentary Test DIP switch on the accessory board. Set DIP switch 3 to the ON (maintained) position.

When the EAM Test button is used to start the generator set and transfer the load, the audible alarm chirps once every 10 minutes to indicate that the system has been started remotely and is running.

Alarm silence button. Press the alarm silence button to silence the alarm. Press the button again to reactivate the alarm. The alarm silence button also acts as a lamp test button. Press it to light all of the EAM LEDs.

4.2.4 EAM Indicators

Figure 4-7 summarizes the operation of LEDs and the audible alarm.

LEDs		Alarm	Condition
GEN	Steady	One chirp/10 minutes	Emergency power system supplying load after a remote start signal from the EAM Test button.
GEN	Steady	None	Emergency power system supplying load due to automatic start after utility power loss or exercise run.
GEN	Flashing Fast (every second)	None	Supply load in silent mode.
GEN	Flashing Slow (every 2 seconds)	None	System starting or stopping in response to Test (Start/Stop) button.
Fault	Steady	Three chirps/10 minutes	Power system fault or EAM low battery.
Fault	Flashing		Test did not start within 2 minutes of Test button activation.

Figure 4-7 EAM LED and Audible Alarm Operation

Generator Set Supplying Load LED. Lights steadily to indicate that the generator set is running and connected to the electrical load.

When the test button is pressed to start a test, the LED flashes slowly until the generator set starts and the ATS transfers the load. When the Test button is pressed to stop a test, the LED flashes slowly until the generator set stops.

Fault LED. Lights steadily to indicate a system fault. Flashes slowly to indicate that a test did not start within 2 minutes after the Test button was pressed.

Audible alarm. The audible alarm can indicate that the system is running or that there is a fault.

- System Running: The alarm sounds to indicate that the generator set has been started by a remote start command from the EAM. The alarm does *not* sound if the system is running due to an exercise run or due to an automatic start triggered by loss of the utility power.
- Faults: The alarm sounds and the fault LED lights or flashes to indicate power system faults or a low battery in the alarm module. See Figure 4-7.

4.3 Programmable Exerciser

The optional programmable exerciser is a 7-day timer that allows programming of up to 8 on/off events per day. Use it to program weekly exercise periods in addition to the exercise time set through the ATS controller. The timer mounts inside the ATS enclosure. See Figure 4-8.

Figure 4-8 Programmable Exerciser

Note: The optional accessory board is required for programmable exerciser connection and operation.

Programmable exerciser features include:

- Seven-day programmable timer allows scheduling up to 56 on/off events.
- LCD display indicates day, time, program/run modes, on/off status, and skip cycle status.
- Skip next cycle button.
- 5-year lithium backup battery.

The programmed exercise periods operate in addition to an exercise period set by pressing the exercise button on the ATS controller.

Connect the programmable exerciser to the remote exercise terminals on accessory board connector P9. See Section 4.1.3 and the wiring diagram in Section 7. Refer to the instruction sheet provided with the programmable exerciser for programming instructions.

4.4 Model SE Accessories

The service entrance (SE) model transfer switch offers all the standard accessories discussed in previous sections plus the additional accessories discussed here. See dimension drawings ADV-8444 or ADV-8445 in Section 7 for model SE accessory locations.

4.4.1 Surge Protective Device (SPD) (Model SE)

An optional surge protective device (SPD) is available for the service entrance model transfer switch. Installed on the Normal source side, the SPD protects the system from voltage surges, preventing damage to household loads. The SPD resets automatically.

Diagnostic LEDs

Red and green indicators on the surge protective device (SPD) indicate connected power and protected status. See Figure 4-9 and Figure 4-10.

Note: All wires must be connected and power applied for the LEDs to illuminate.

If the red indicator is on, the SPD no longer provides protection. Replace the SPD. See Section 6.5 for replacement instructions.

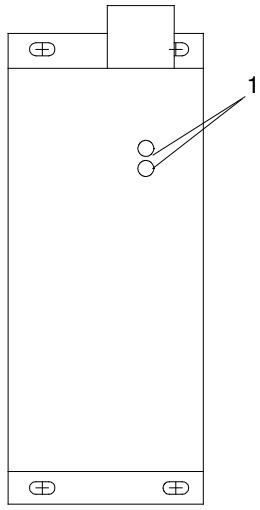

1. Red and green indicators

GM79899

Figure 4-9 SPD Status Indicators

Green LED	Red LED	Status
ON	OFF	AC power is present and protection is provided.
OFF	ON	AC power is present but the SPD module needs replacement. The remote indication changes state. See Section 6.5 for SPD replacement instructions.
OFF	OFF	AC power or ground is missing: Verify that wire connections are correct. Make sure that circuit breaker is engaged. Check panel for power.

Figure 4-10 SPD Diagnostic Indication

SPD Specifications	
Surge current	80 kA per phase
Let-through voltage	430 V @ 3 kA 690 V @ 10 kA

Figure 4-11 SPD Specifications

Remote Indication

An indicator for the optional surge protective device (SPD) can also be connected to the accessory connection terminal block. The contact changes state to indicate that the SPD module needs replacement. See Section 2.7.5 for remote indicator connection instructions.

4.4.2 Accessory Circuit Breakers (Model SE)

Optional 15-amp single-pole circuit breakers for the generator set carburetor heater and the transfer switch space heater are available for the service entrance model transfer switch. See Section 2.7.5 for connection instructions.

The service entrance model includes a 15-amp single-pole circuit breaker for the generator set battery charger as standard equipment.

Circuit Breaker Trip/Reset

The trip indication window appears red when the breaker is tripped. Identify and correct the cause of the overcurrent trip before resetting the breaker.

To reset the circuit breaker, move the breaker handle to the O/OFF position and then back to I/ON.

4.4.3 Enclosure Space Heater (Model SE)

An optional enclosure space heater is available for the service entrance model transfer switch. The heater prevents condensation on the electrical components inside the enclosure.

The space heater control is located on the left side of the enclosure. See ADV-8444 or ADV-8445 in Section 7 for the location of the space heater and controls.

The space heater is equipped with an adjustable temperature and humidity control. See Figure 4-13. The space heater will include either temperature/humidity control GM 47356 or humidity control GM64488. See Figure 4-12 for temperature and relative humidity adjustment ranges and factory settings. Adjust the temperature and relative humidity to prevent condensation. The appropriate settings will vary with location and climate conditions.

See the accessory schematic diagrams in Section 7 for connections.

Control	Control	Adjustment Range
GM47356	Temperature	32–140° F
	Relative Humidity	50–90%
GM64488	Relative Humidity	35–95%

Figure 4-12 Heater Control Settings

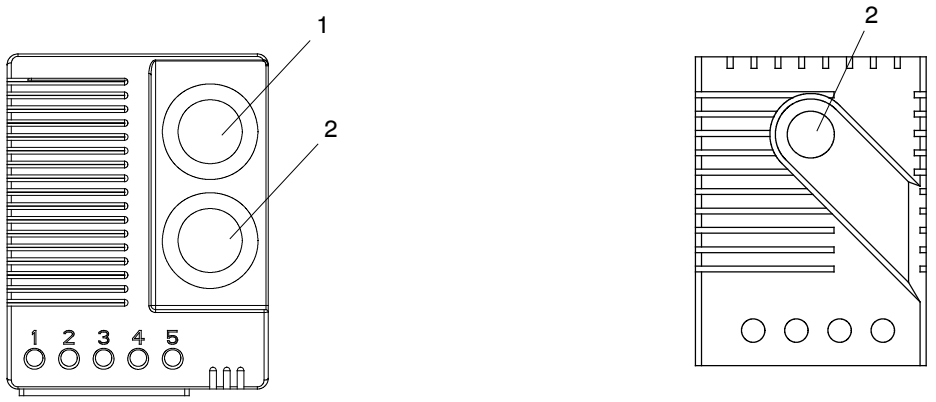

Temperature/Humidity Control GM47356

Humidity Control GM64488

1. Temperature control
2. Relative humidity control

Figure 4-13 Space Heater Controls

Notes

Note: This section applies only to service entrance model transfer switches.

⚠ DANGER

Hazardous voltage.
Will cause severe injury or death.

This equipment must be installed and serviced by qualified electrical personnel.

5.1 Service Disconnect Procedure

Use the following procedure to disconnect the utility source on service entrance model transfer switches.

Note: Power is still present on the input side of the utility source circuit breaker after this procedure.

1. Prevent the emergency generator set from starting:
   a. Turn the generator set OFF.
   b. Disconnect power to the generator set battery charger.
   c. Disconnect the generator set engine starting battery, negative (–) lead first.
2. On the transfer switch, remove the enclosure front panel. Do not remove the inner panel.
3. Move the utility source circuit breaker to the OFF position.
4. Check the LEDs on the transfer switch controller's user interface. Both the Utility Available and GEN Available LEDs should be off.

   Note: Power is still present on the input side of the utility source circuit breaker. Do not remove the protective barrier around the utility source connection lugs.
5. To lock out the transfer switch, replace the enclosure front panel and attach a padlock to the hasp.

5.2 Source Circuit Breaker Reset

If the utility source circuit breaker trips due to an overcurrent condition, the transfer switch will issue an engine start signal and then transfer to the emergency source when it is available.

When the circuit breaker trips, the handle moves to an intermediate position. To reset a tripped circuit breaker. move the handle to the extreme OFF position and then to the ON position.

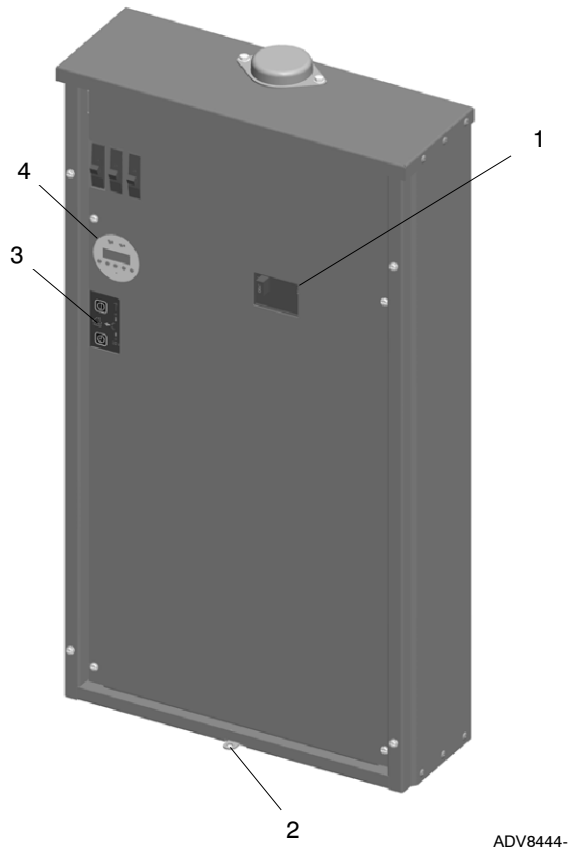

1. Normal/utility circuit breaker
2. Padlock hasp
3. Controller's user interface
4. Optional programmable exerciser

Figure 5-1 Service Entrance Model, Front Panel Removed (200 Amp model shown)

Notes

6.1 Introduction

Regular preventive maintenance ensures safe and reliable operation and extends the life of the transfer switch. Preventive maintenance includes periodic testing, cleaning, inspection, and replacement of worn or missing components. Section 6.4 contains a service schedule for recommended maintenance tasks.

A local authorized distributor/dealer can provide complete preventive maintenance and service to keep the transfer switch in top condition. Unless otherwise specified, have maintenance or service performed by an authorized distributor/dealer in accordance with all applicable codes and standards. See the Service Assistance section in this manual for how to locate a local distributor/dealer.

Keep records of all maintenance or service.

Replace all barriers and close and lock the enclosure door after maintenance or service and before reapplying power.

⚠ WARNING

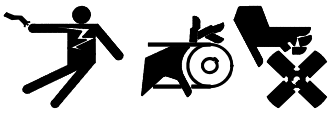

Accidental starting.
Can cause severe injury or death.

Disconnect the battery cables before working on the generator set. Remove the negative (-) lead first when disconnecting the battery. Reconnect the negative (-) lead last when reconnecting the battery.

Disabling the generator set. Accidental starting can cause severe injury or death. Before working on the generator set or connected equipment, disable the generator set as follows: (1) Move the generator set master switch to the OFF position. (2) Disconnect the power to the battery charger. (3) Remove the battery cables, negative (-) lead first. Reconnect the negative (-) lead last when reconnecting the battery. Follow these precautions to prevent starting of the generator set by an automatic transfer switch, remote start/stop switch, or engine start command from a remote computer.

⚠ DANGER

Hazardous voltage.
Will cause severe injury or death.

Disconnect all power sources before opening the enclosure.

⚠ DANGER

Hazardous voltage.
Will cause severe injury or death.

Only authorized personnel should open the enclosure.

⚠ WARNING

Hazardous voltage. Moving parts.
Can cause severe injury or death.

Operate the generator set only when all guards and electrical enclosures are in place.

Grounding the transfer switch. Hazardous voltage can cause severe injury or death. Electrocution is possible whenever electricity is present. Open main circuit breakers of all power sources before servicing equipment. Configure the installation to electrically ground the transfer switch and related equipment and electrical circuits to comply with applicable codes and standards. Never contact electrical leads or appliances when standing in water or on wet ground, as the chance of electrocution increases under such conditions.

Servicing the transfer switch. Hazardous voltage can cause severe injury or death. Deenergize all power sources before servicing. Turn off the main circuit breakers of all transfer switch power sources and disable all generator sets as follows: (1) Move all generator set master controller switches to the OFF position. (2) Disconnect power to all battery chargers. (3) Disconnect all battery cables, negative (-) leads first. Reconnect negative (-) leads last when reconnecting the battery cables after servicing. Follow these precautions to prevent the starting of generator sets by an automatic transfer switch, remote start/stop switch, or engine start command from a remote computer. Before servicing any components inside the enclosure: (1) Remove all jewelry. (2) Stand on a dry, approved electrically insulated mat. (3) Test circuits with a voltmeter to verify that they are deenergized.

Short circuits. Hazardous voltage/current can cause severe injury or death. Short circuits can cause bodily injury and/or equipment damage. Do not contact electrical connections with tools or jewelry while making adjustments or repairs. Remove all jewelry before servicing the equipment.

NOTICE

Hardware damage. The transfer switch may use both American Standard and metric hardware. Use the correct size tools to prevent rounding of the bolt heads and nuts.

NOTICE

Electrostatic discharge damage. Electrostatic discharge (ESD) damages electronic circuit boards. Prevent electrostatic discharge damage by wearing an approved grounding wrist strap when handling electronic circuit boards or integrated circuits. An approved grounding wrist strap provides a high resistance (about 1 megohm), *not a direct short*, to ground.

Screws and nuts are available in different hardness ratings. To indicate hardness, American Standard hardware uses a series of markings and metric hardware uses a numeric system. Check the markings on the bolt heads and nuts for identification.

6.2 Testing

6.2.1 Weekly Generator Set Exercise

Use the exerciser or a manual test to start and run the generator set under load once a week to maximize the reliability of the emergency power system. See Section 2.8 for test instructions and Section 2.9 for instructions to set the exerciser.

Optional accessories allow adjustment of the exercise schedule and duration. See Sections 4.1 and 4.3. Refer to the generator set operation manual for exercise recommendations.

6.2.2 Monthly Automatic Control System Test

Test the transfer switch's automatic control system monthly. See Section 2.8 for the test procedure.

- Verify that the expected sequence of operations occurs as the switch transfers the load to the emergency source when a preferred source failure occurs or is simulated.
- Observe the indicator LEDs included on the transfer switch to check their operation.
- Watch and listen for signs of excessive noise or vibration during operation.
- After the switch transfers the load to the standby source, end the test and verify that the expected sequence of operations occurs as the transfer switch retransfers to the preferred source and signals the generator set to shut down after a cooldown period.

6.3 Inspection and Service

Contact an authorized distributor/dealer to inspect and service the transfer switch annually and also when any wear, damage, deterioration, or malfunction of the transfer switch or its components is evident or suspected.

6.3.1 General Inspection

External Inspection. Keep the transfer switch clean and in good condition by performing a weekly general external inspection of the transfer switch. Check for any condition of vibration, leakage, excessive temperature, contamination, or deterioration. Remove accumulations of dirt, dust, and other contaminants from the transfer switch's external components or enclosure with a vacuum cleaner or by wiping with a dry cloth or brush.

Note: Do not use compressed air to clean the transfer switch because it can cause debris to lodge in the components and damage the switch.

Tighten loose external hardware. Replace worn, missing, or broken external components with manufacturer-recommended replacement parts. Contact an authorized distributor/dealer for specific part information and ordering.

Internal Inspection. Disconnect all power sources, open the transfer switch enclosure door, and inspect internal components monthly or when any condition noticed during an external inspection may have affected internal components.

Contact an authorized distributor/dealer to inspect and service the transfer switch if any of the following conditions are found inside the transfer switch.

- Accumulations of dirt, dust, moisture, or other contaminants.
- Signs of corrosion.
- Worn, missing, or broken components.
- Loose hardware.
- Wire or cable insulation deterioration, cuts, or abrasion.
- Signs of overheating or loose connections: discoloration of metal, melted plastic, or a burning odor.
- Other evidence of wear, damage, deterioration, or malfunction of the transfer switch or its components.

If the application does not allow a power interruption for the time required for the internal inspection, have an authorized distributor/dealer perform the internal inspection.

6.3.2 SPD Inspection (Model SE)

At intervals not exceeding two months, check the following items on the surge protective device (SPD):

- Status indication LEDs
- Condition of connecting leads

6.3.3 Other Inspections and Service

Have an authorized distributor/dealer perform scheduled maintenance, service, and other maintenance that ensures the safe and reliable operation of the transfer switch. See Section 6.4, Service Schedule, for the recommended maintenance items and service intervals.

Have an authorized distributor/dealer repair or replace damaged or worn internal components with manufacturer-recommended replacement parts.

6.4 Service Schedule

Follow the service schedule below for the recommended service intervals. Have all service performed by an authorized distributor/dealer except for activities designated by an X, which may be performed by the switch operator.

System Component or Procedure	See Section	Visually Inspect	Check	Adjust, Repair, Replace	Clean	Test	Frequency
Electrical System							
Check for signs of overheating or loose connections: discoloration of metal, melted plastic, or a burning odor	6.3.1	X	X				Y
Check the contactor's external operating mechanism for cleanliness; clean and relubricate if dirty *	6.3.1	X			D (clean and lube)		Y
Inspect wiring insulation for deterioration, cuts, or abrasion. Repair or replace deteriorated or damaged wiring	6.3.1	X	D	D			Y
Tighten control and power wiring connections to specifications	2.5		D			D	Y
Check the transfer switch's main power switching contacts' condition; clean or replace the main contacts or replace the contactor assembly as necessary	S/M	D		D	D		Y
Control System							
Exercise the generator set under load	2.9					X	W
Test the transfer switch's automatic control system	2.8	X				X	M
Test all indicators (LEDs) and all remote control systems for operation	3.2	D	D	D		D	Y
General Equipment Condition							
Inspect the outside of the transfer switch for any signs of excessive vibration, leakage, high temperature, contamination, or deterioration *	6.3	X			X		M
Check that all external hardware is in place, tightened, and not badly worn	6.3	X	X	X			M
Inspect the inside of transfer switch for any signs of excessive vibration, leakage, high temperature, contamination, or deterioration *	6.3	D	D		D		Y
Check that all internal hardware is in place, tightened, and not badly worn	6.3	X	D	D			Y
SPD Modules (if equipped, SE model only)							
Check status indication light	4.4.1	X		D			Every 2 months
Check condition of connecting leads	7 (W/D)	X		D			

* Service more frequently if the transfer switch is operated in dusty or dirty areas.

See Section: Read these sections carefully for additional information before attempting maintenance or service.

Visually Inspect: Examine these items visually.

Check: Requires physical contact with or movement of system components, or the use of nonvisual indications.

Adjust, Repair, Replace: Includes tightening hardware and lubricating the mechanism. May require replacement of components depending upon the severity of the problem.

Clean: Remove accumulations of dirt and contaminants from external transfer switch's components or enclosure with a vacuum cleaner or by wiping with a dry cloth or brush. *Do not use compressed air to clean the switch because it can cause debris to lodge in the components and cause damage.*

Test: May require tools, equipment, or training available only through an authorized distributor/dealer.

Symbols used in the chart:

X=The transfer switch operator can perform these tasks.
D=Authorized distributor/dealer must perform these tasks.
W=Weekly
M=Monthly
Q=Quarterly
S=Semiannually (every six months)
Y=Yearly (annually)
W/D=Wiring diagram

6.5 Surge Protective Device (SPD) Replacement

The green indicator light goes out if the SPD capability is exceeded or if there is an internal safety component failure in the SPD module. See Figure 4-10. Replace the module if the green indicator is off and the red indicator is on. Follow the replacement procedure in this section and see Figure 6-1.

⚠ DANGER

Hazardous voltage.
Will cause severe injury or death.

This equipment must be installed and serviced by qualified electrical personnel.

Servicing the transfer switch. Hazardous voltage can cause severe injury or death. Deenergize all power sources before servicing. Turn off the main circuit breakers of all transfer switch power sources and disable all generator sets as follows: (1) Move all generator set master controller switches to the OFF position. (2) Disconnect power to all battery chargers. (3) Disconnect all battery cables, negative (-) leads first. Reconnect negative (-) leads last when reconnecting the battery cables after servicing. Follow these precautions to prevent the starting of generator sets by an automatic transfer switch, remote start/stop switch, or engine start command from a remote computer. Before servicing any components inside the enclosure: (1) Remove all jewelry. (2) Stand on a dry, approved electrically insulated mat. (3) Test circuits with a voltmeter to verify that they are deenergized.

SPD Replacement Procedure

1. Remove the ATS enclosure's front panel and move the battery charger circuit breaker handle to the OFF position.

2. Disable the generator set to prevent starting as follows:

   a. Turn the generator set OFF: Move the generator set master switch to the OFF position or press the OFF button on the generator set controller.

   b. Disconnect power to the battery charger.

   c. Disconnect the generator set engine starting battery, negative (-) lead first.

3. On the ATS, move the Normal service disconnect circuit breaker to the OFF position.

   Note: Utility power is still present at the inlet side of the normal source circuit breaker.

4. Remove the ATS enclosure's inner panel.

5. Refer to the service entrance switch wiring diagram in Section 7. Note connections and disconnect the SPD leads to the normal source service disconnect circuit breaker, ground, and neutral. Disconnect the SPD red, yellow, and blue leads from the customer connection terminal block.

6. Remove the 4 SPD mounting screws.

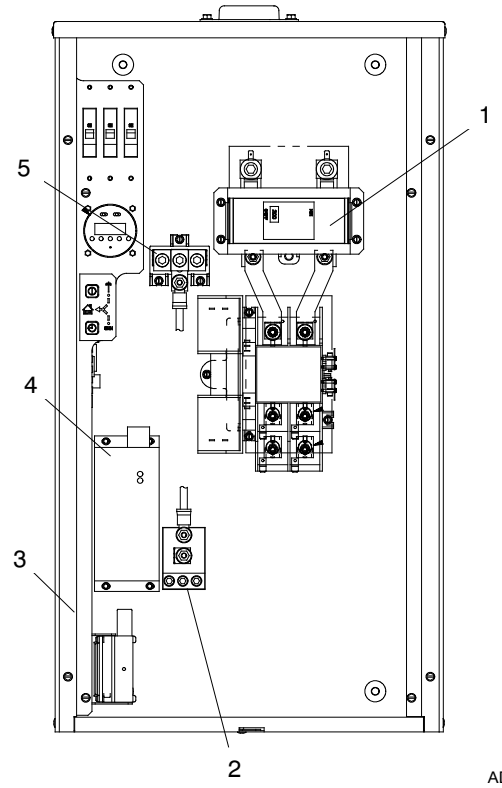

1. Normal source service disconnect circuit breaker
2. Ground
3. Terminal block TB1 location
4. SPD module
5. Neutral

Figure 6-1 SPD Module Replacement, 200 Amp SE Models

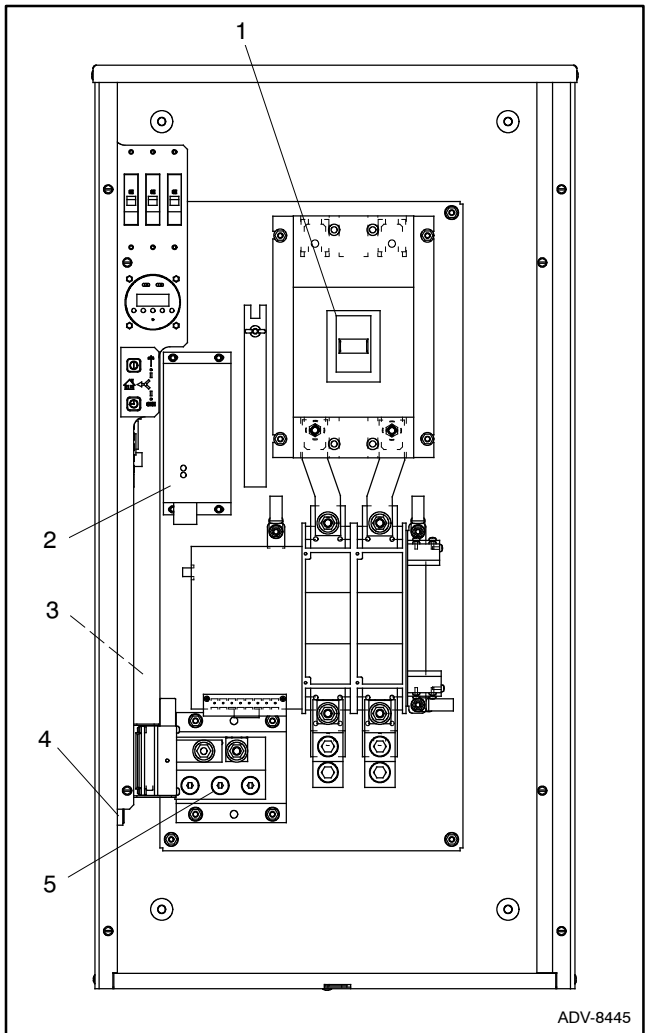

1. Normal (utility) source service disconnect breaker
2. SPD module
3. Terminal block TB1 location
4. Ground
5. Neutral

Figure 6-2 SPD Module Replacement, 400 Amp SE Models

7. Install the new module and tighten the mounting screws to 3 Nm (26 in. lb.).
8. Connect the SPD leads. See the service entrance transfer switch wiring diagram in Section 7. Also see Figure 6-3.
9. Replace the enclosure's inner panel.
10. Close the Normal and Emergency service disconnect circuit breakers.
11. Reconnect the generator set engine starting battery, negative (–) lead last.
12. Reconnect power to the battery charger.
13. Close the battery charger circuit breaker.
14. Replace the ATS enclosure's front panel.
15. Put the generator set into automatic (standby) mode: Move the generator set master switch to the AUTO position or press the AUTO button on the generator set controller.

SPD Lead	Connection
Black	Normal Source service disconnect breaker
Black	
White	Neutral
Green	Ground
Red	NC, TB1-7
Blue	NO, TB1-6
Yellow	C, TB1-5

Figure 6-3 SPD Connections

Section 7 Diagrams and Drawings

Drawings are arranged in alphanumeric order on the following pages.

Diagram or Drawing	Drawing Number	Page
Enclosure Dimensions Drawings		
100 Amp NEMA 1 without Load Center	ADV-8437-A	52
100 Amp NEMA 1 with Load Center	ADV-8435-A	50
100 Amp NEMA 3R without Load Center	ADV-8440-A	56
100 Amp NEMA 3R with Load Center	ADV-8442-A	58
200 Amp NEMA 1 without Load Center	ADV-8438-A	53
200 Amp NEMA1 with Load Center	ADV-8436-A	51
200 Amp NEMA 3R without Load Center	ADV-8441-A	57
200 Amp NEMA 3R with Load Center	ADV-8443-A	59
200 Amp NEMA 3R Service Entrance Switch		
Sheet 1	ADV-8444-B	60
Sheet 2	ADV-8444-B	61
200 Amp NEMA 3R Service Entrance Switch with 42-space load center		
Sheet 1	ADV-8540	64
Sheet 2	ADV-8540	65
Sheet 3	ADV-8540	66
400 Amp NEMA 3R without Load Center		
Sheet 1	ADV-8439-B	54
Sheet 2	ADV-8439-B	55
400 Amp NEMA 3R Service Entrance Switch		
Sheet 1	ADV-8445-B	62
Sheet 2	ADV-8445-B	63
Schematic Diagrams		
100/200 Amp without Load Center	GM34466-E	68
100/200 Amp with Load Center	GM37649-D	69
200 Amp Service Entrance Switch	GM84856	82
Accessories	GM52482-B	73
200 Amp Service Entrance Switch with 42-space load center	GM83845-A	78
400 Amp without Load Center	GM37651-D	71
400 Amp Service Entrance Switch	GM84855	81
Accessories	GM65397-C	75
Wiring Diagrams		
100/200 Amp without Load Center	GM34465-F	67
100/200 Amp with Load Center	GM37650-E	70
200 Amp Service Entrance Switch	GM84857-B	83
Accessories, Sheet 2	GM84857-B	84
200 Amp Service Entrance Switch with 42-space load center	GM83844-B	76
Accessories, Sheet 2	GM83844-B	77
400 Amp without Load Center	GM37652-E	72
400 Amp Service Entrance Switch	GM84854-B	79
Accessories, Sheet 2	GM84854-B	80
Programmable Exerciser (Optional)	GM64071	74

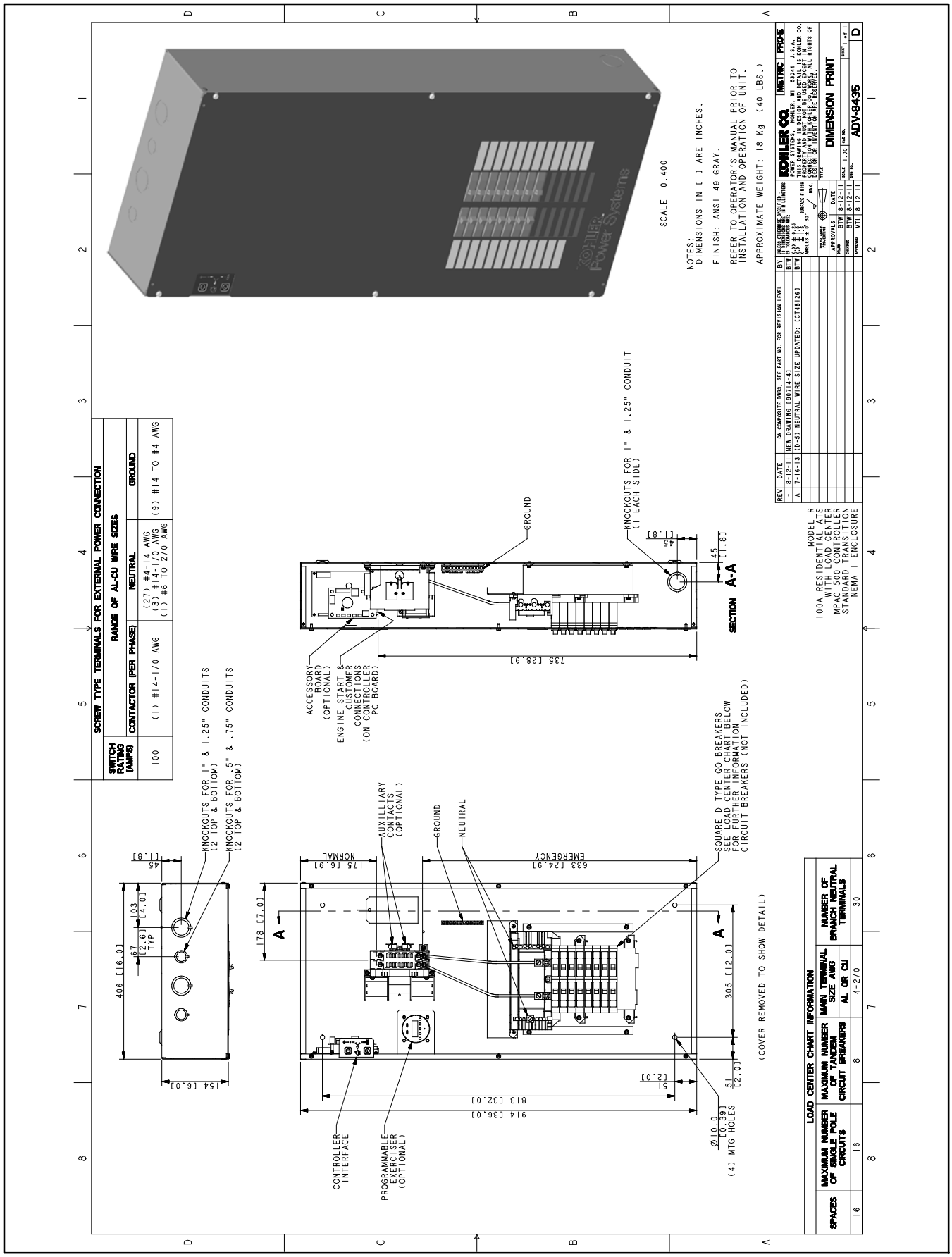

Figure 7-1 Dimension Drawing, 100 Amp NEMA Type 1 Enclosure with Load Center, ADV-8435

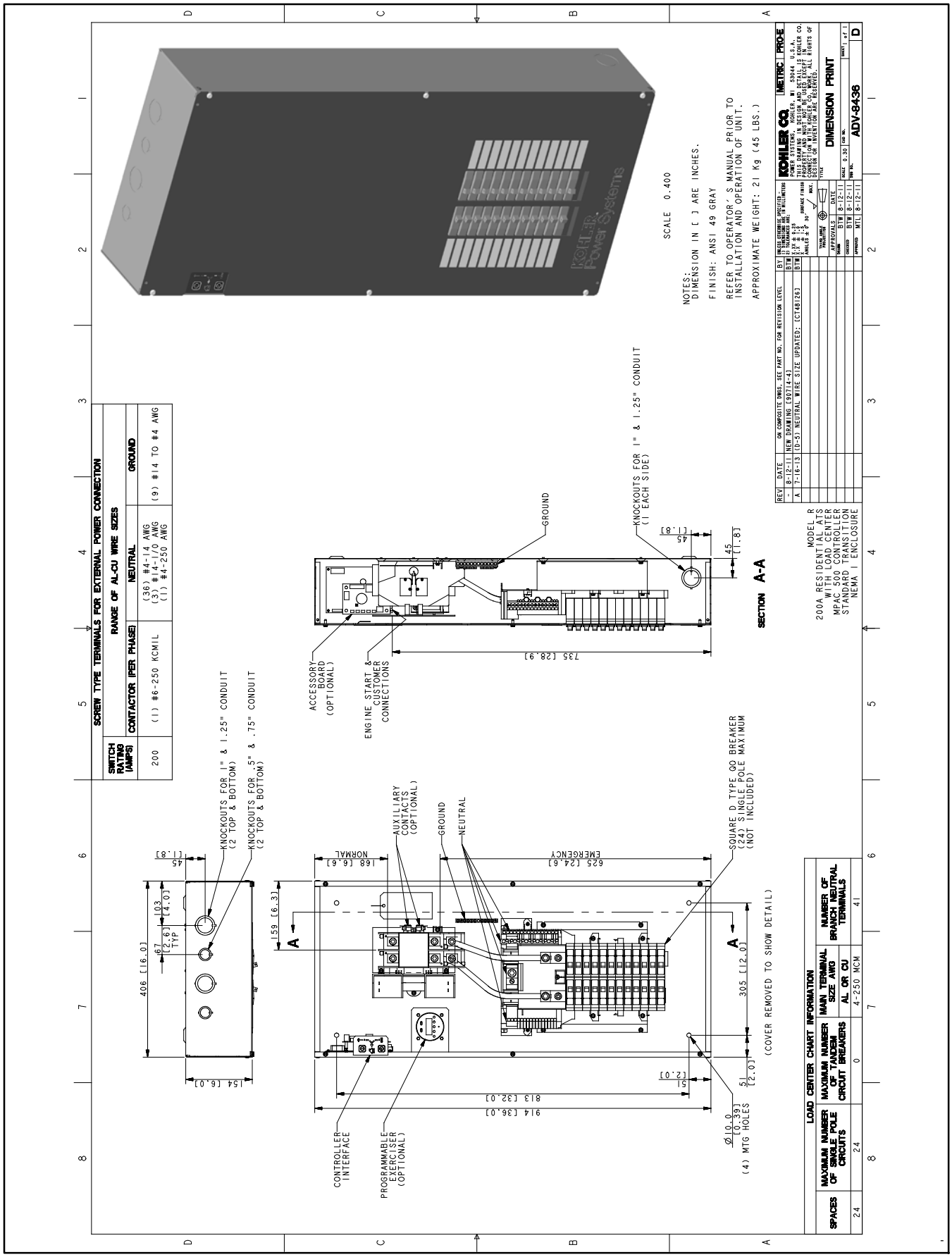

Figure 7-2 Dimension Drawing, 200 Amp NEMA Type 1 Enclosure with Load Center, ADV-8436

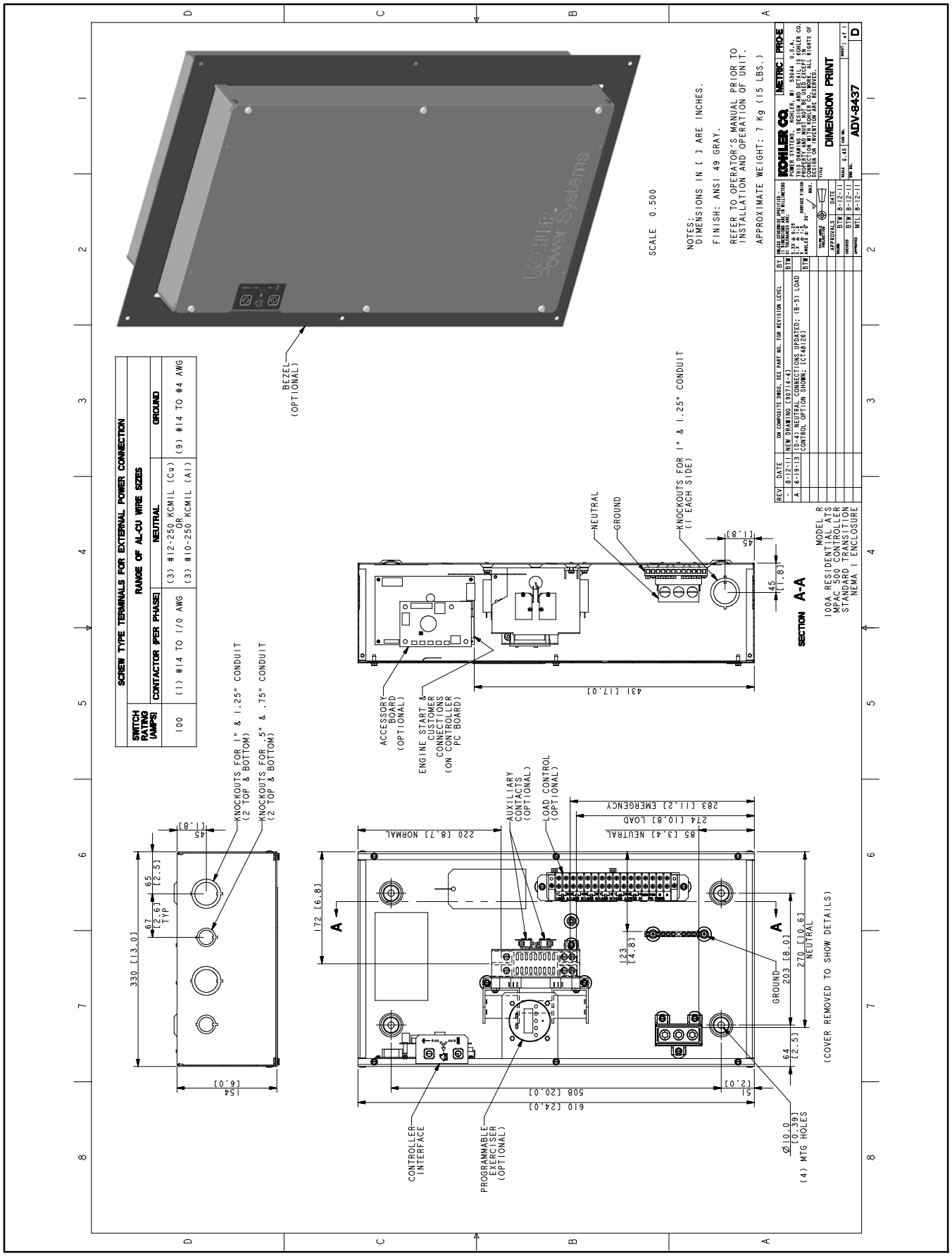

Figure 7-3 Enclosure Dimensions 100 Amp NEMA 1 without Load Center, ADV-8437

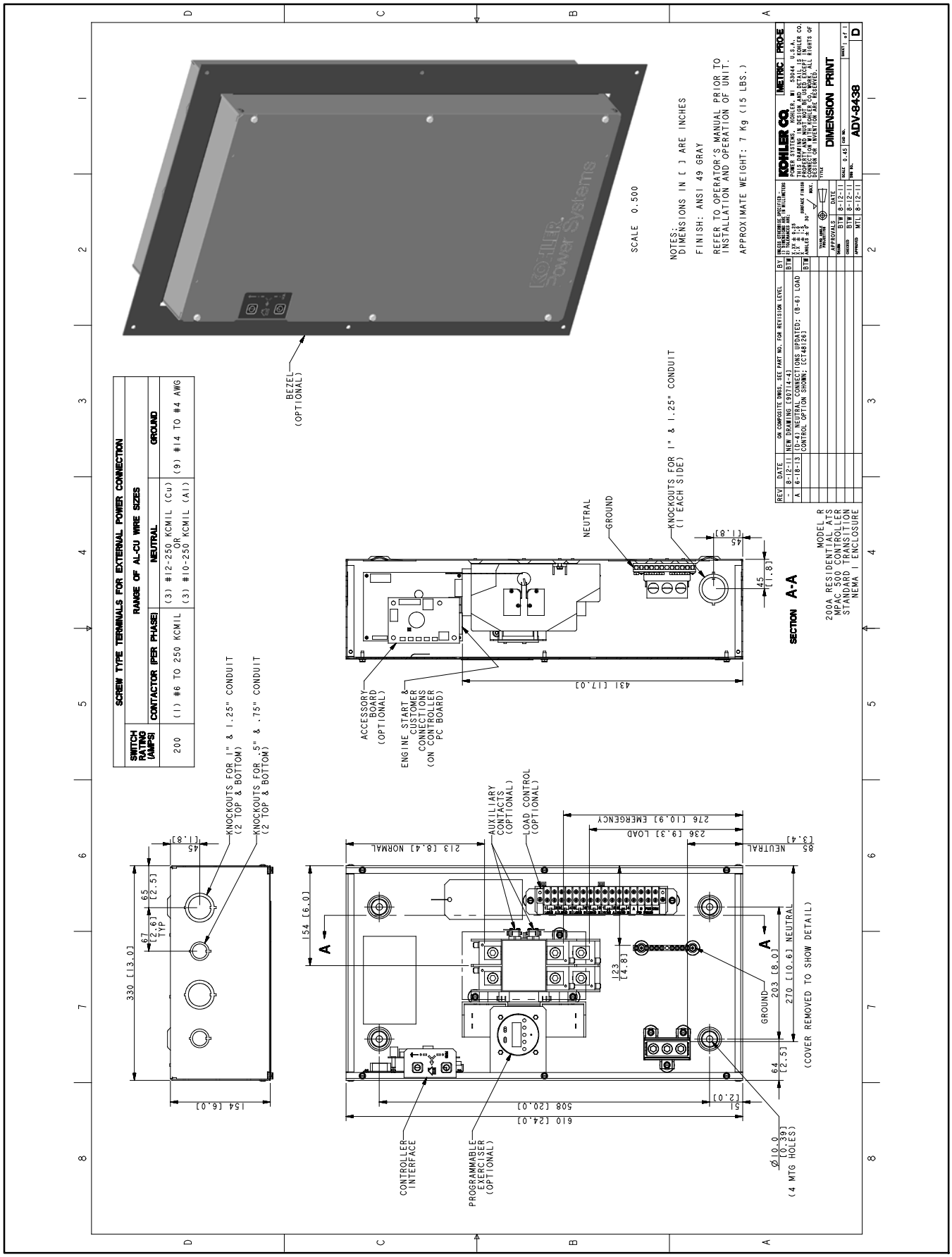

Figure 7-4 Dimension Drawing, 200 Amp NEMA Type 1 Enclosure without Load Center, ADV-8438

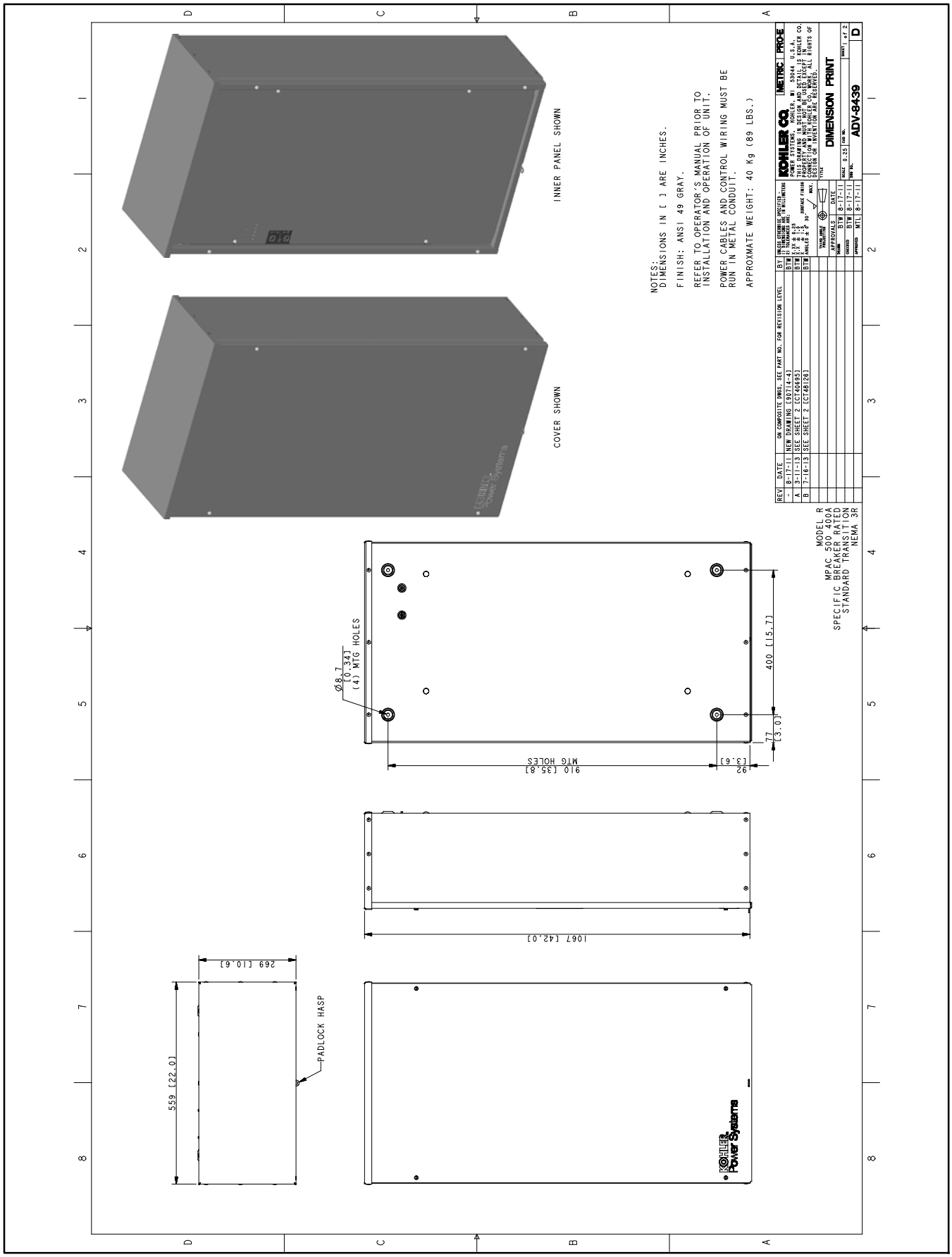

Figure 7-5 Dimension Drawing, 400 Amp NEMA Type 1 and 3R Enclosure, ADV-8439, Sheet 1 of 2

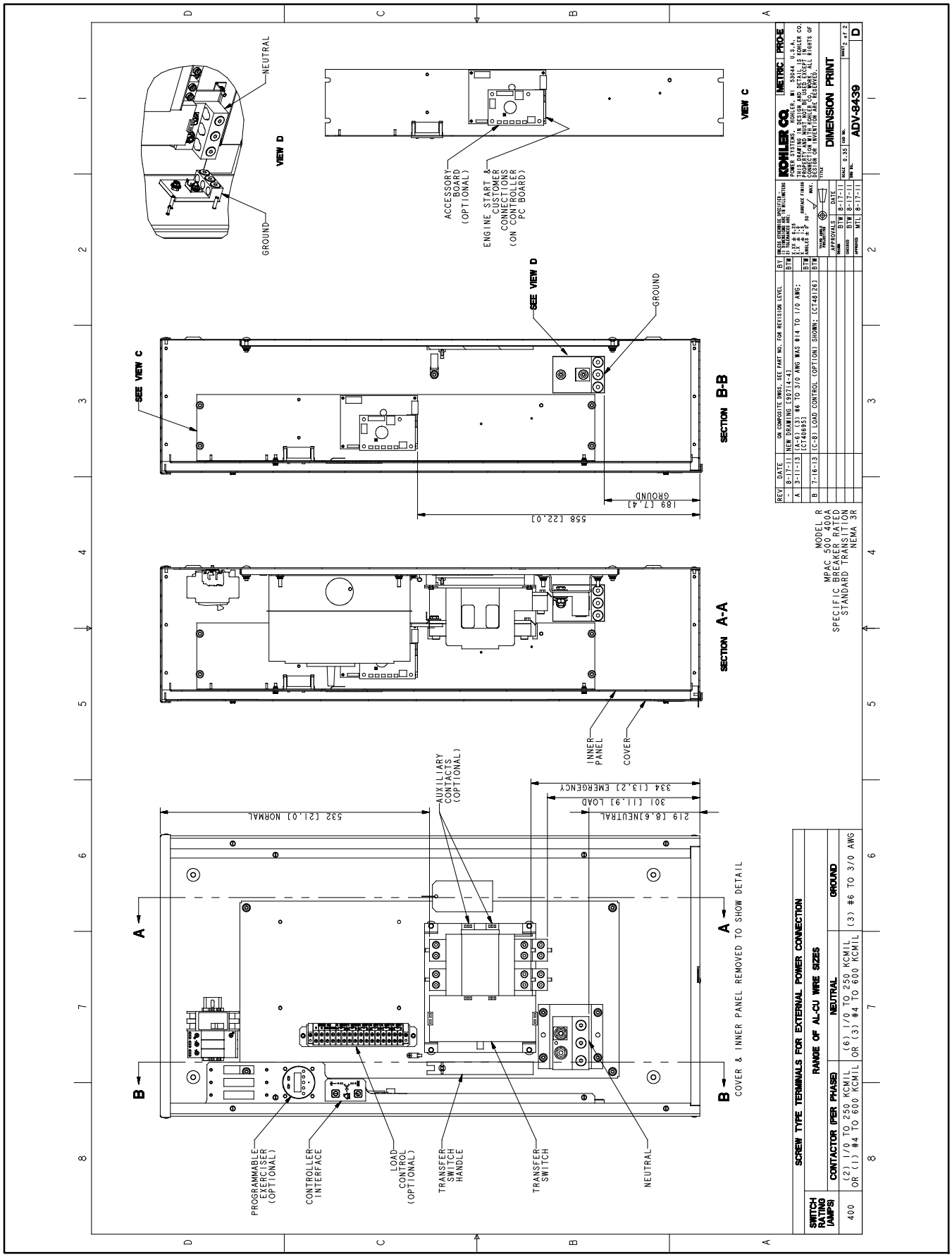

Figure 7-6 Dimension Drawing, 400 Amp NEMA Type 1 and 3R Enclosure, ADV-8439, Sheet 2 of 2

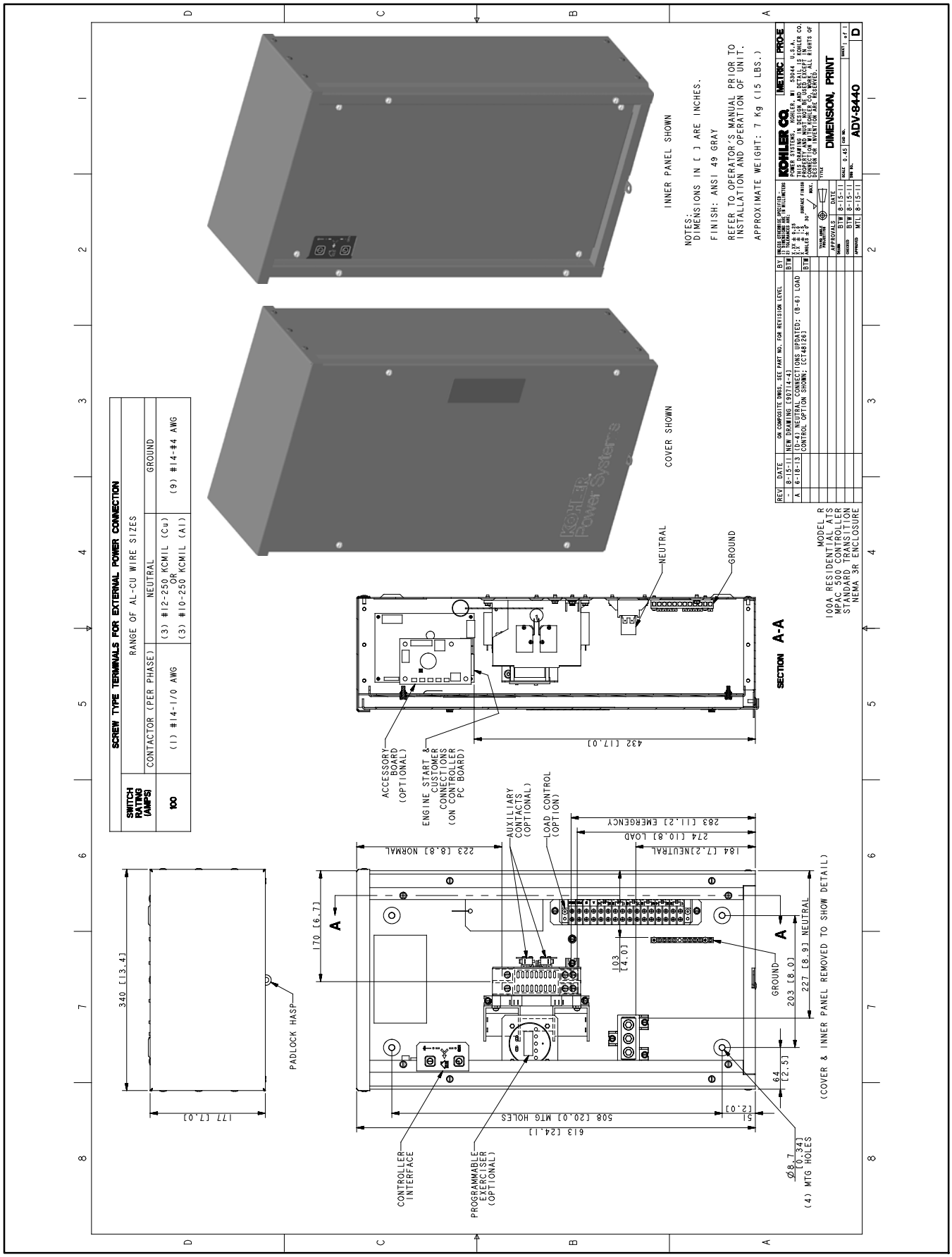

Figure 7-7 Dimension Drawing, 100 Amp NEMA Type 3R Enclosure without Load Center, ADV-8440

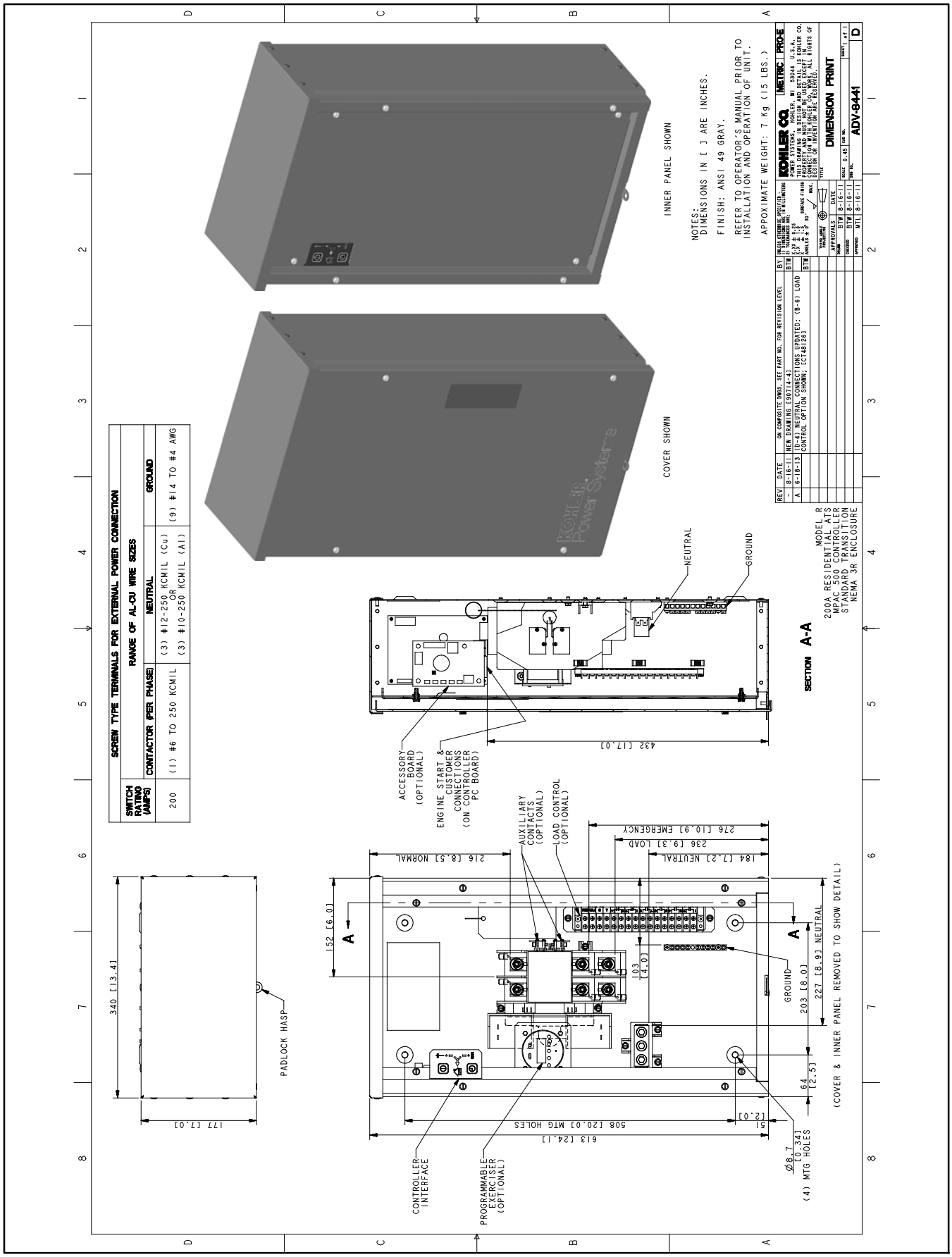

Figure 7-8 Dimension Drawing, 200 Amp NEMA Type 3R Enclosure without Load Center, ADV-8441

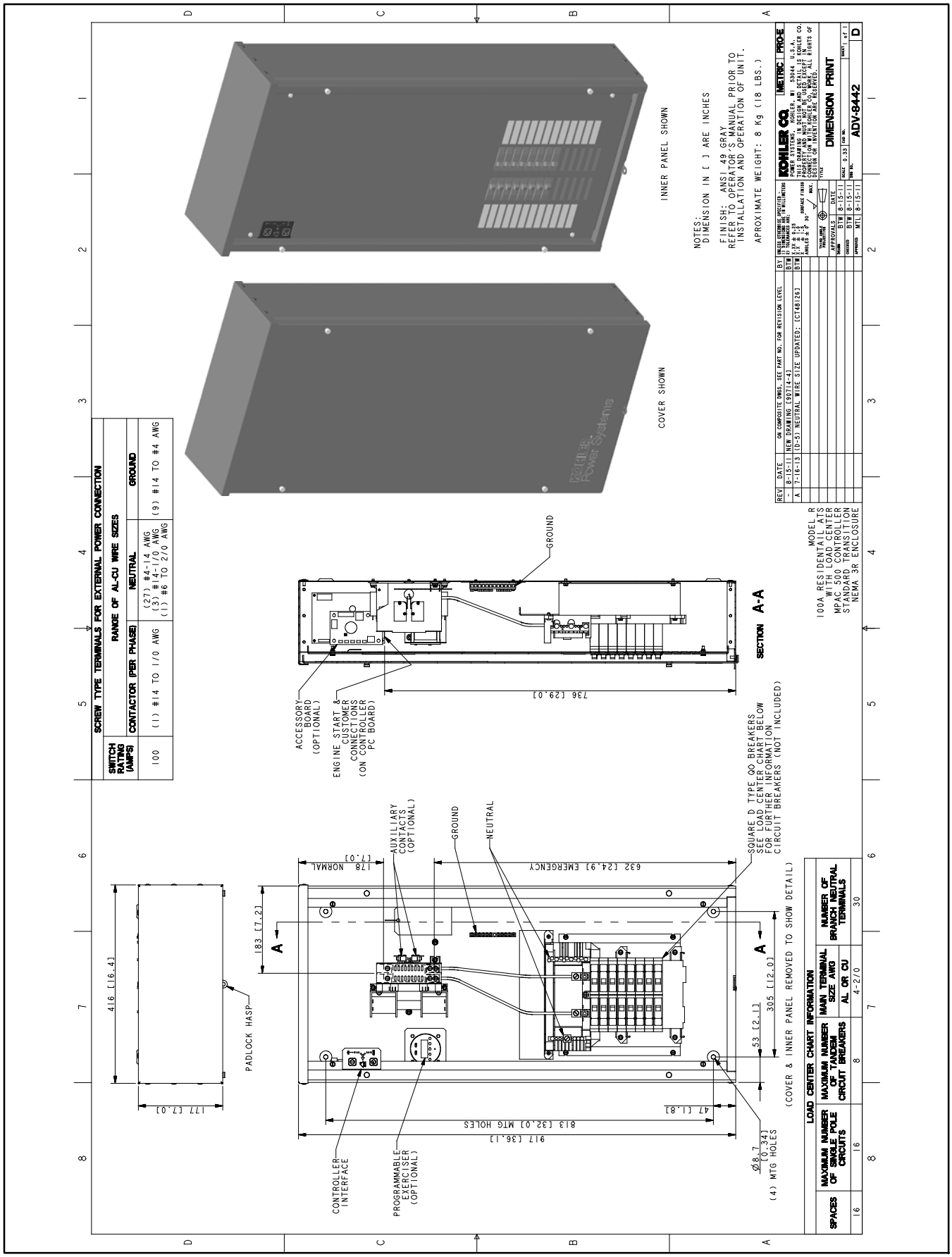

Figure 7-9 Dimension Drawing, 100 Amp NEMA Type 3R Enclosure with Load Center, ADV-8442

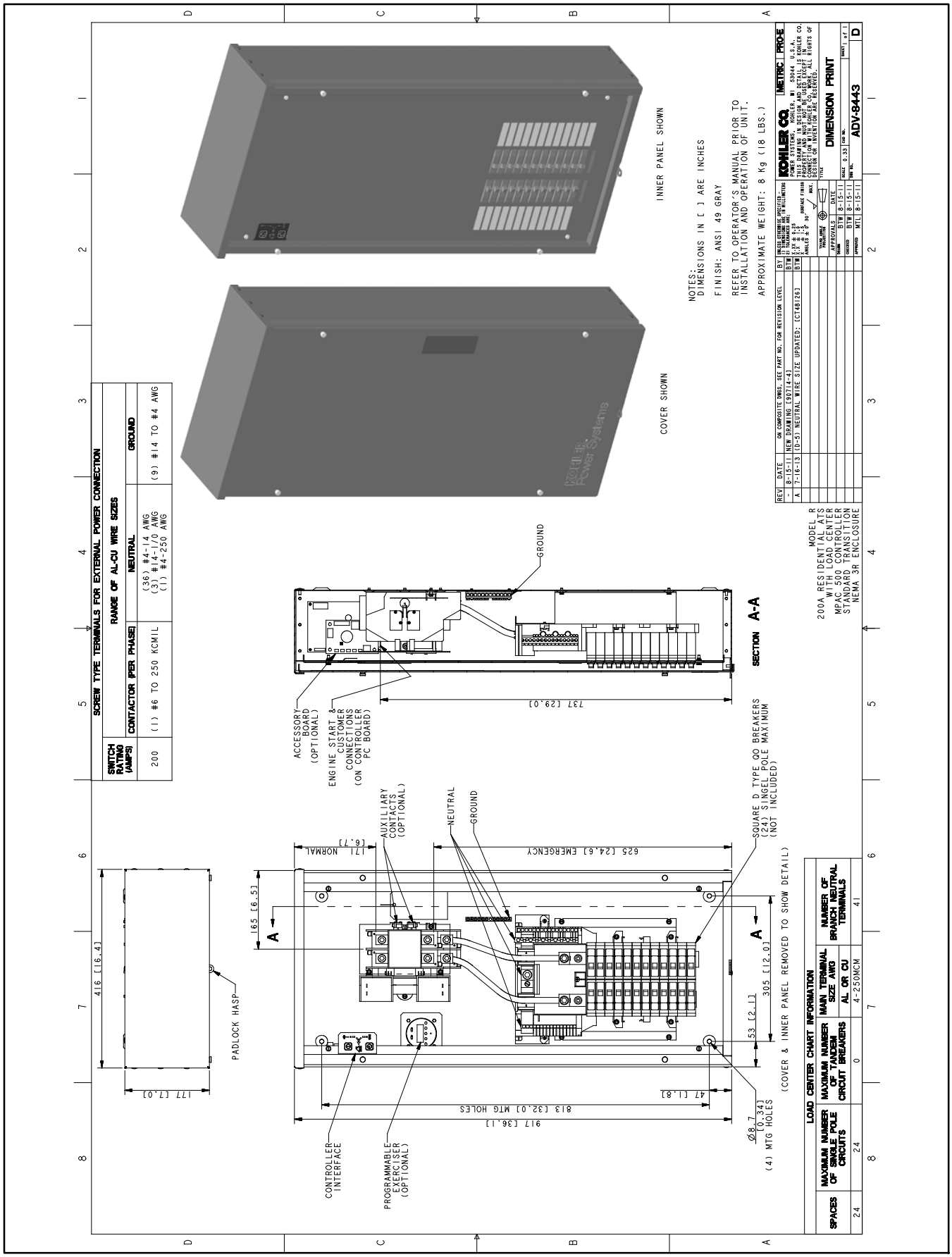

Figure 7-10 Dimension Drawing, 200 Amp NEMA Type 3R Enclosure with Load Center, ADV-8443

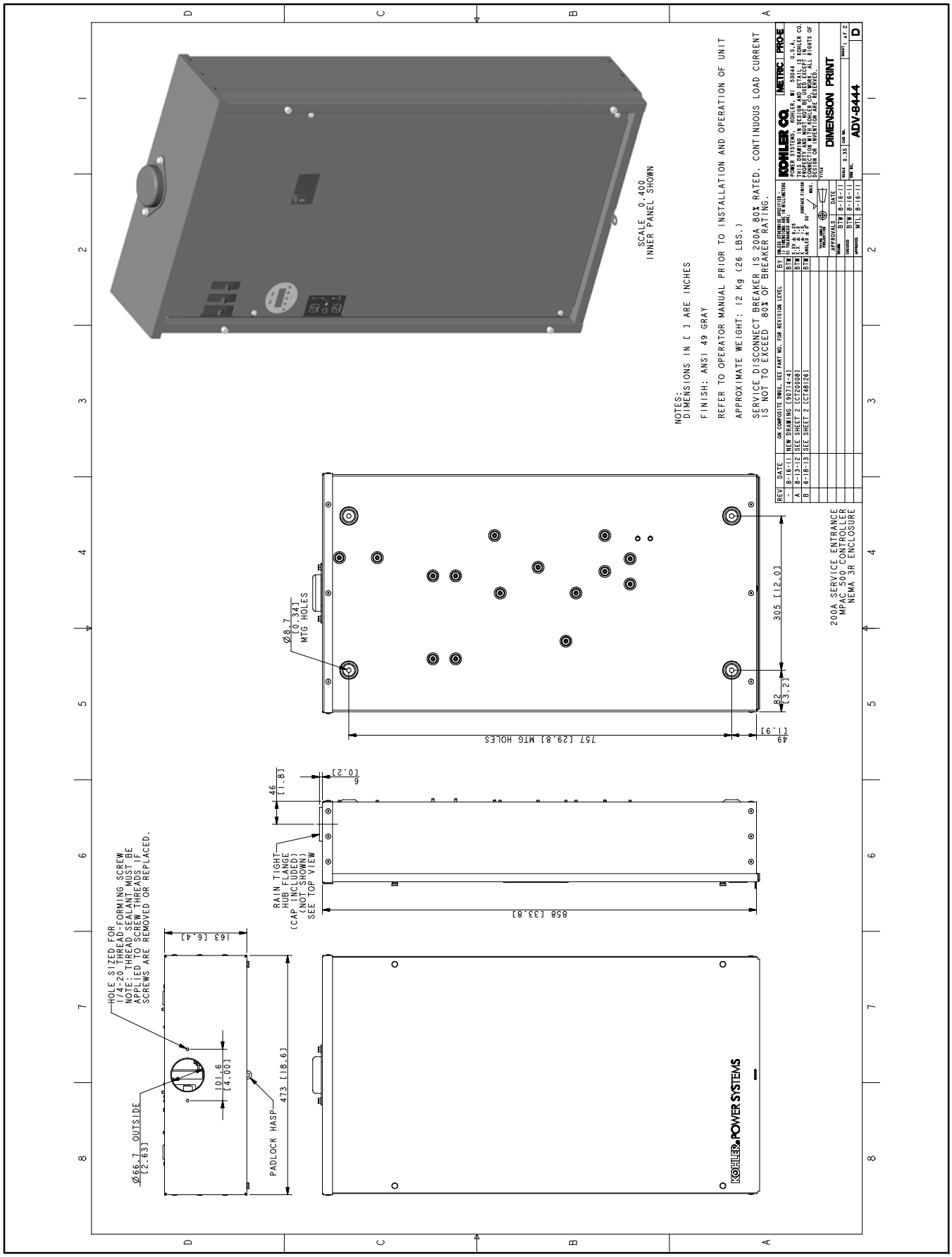

Figure 7-11 Dimension Drawing, 200 Amp Service Entrance Model, ADV-8444, Sheet 1 of 2

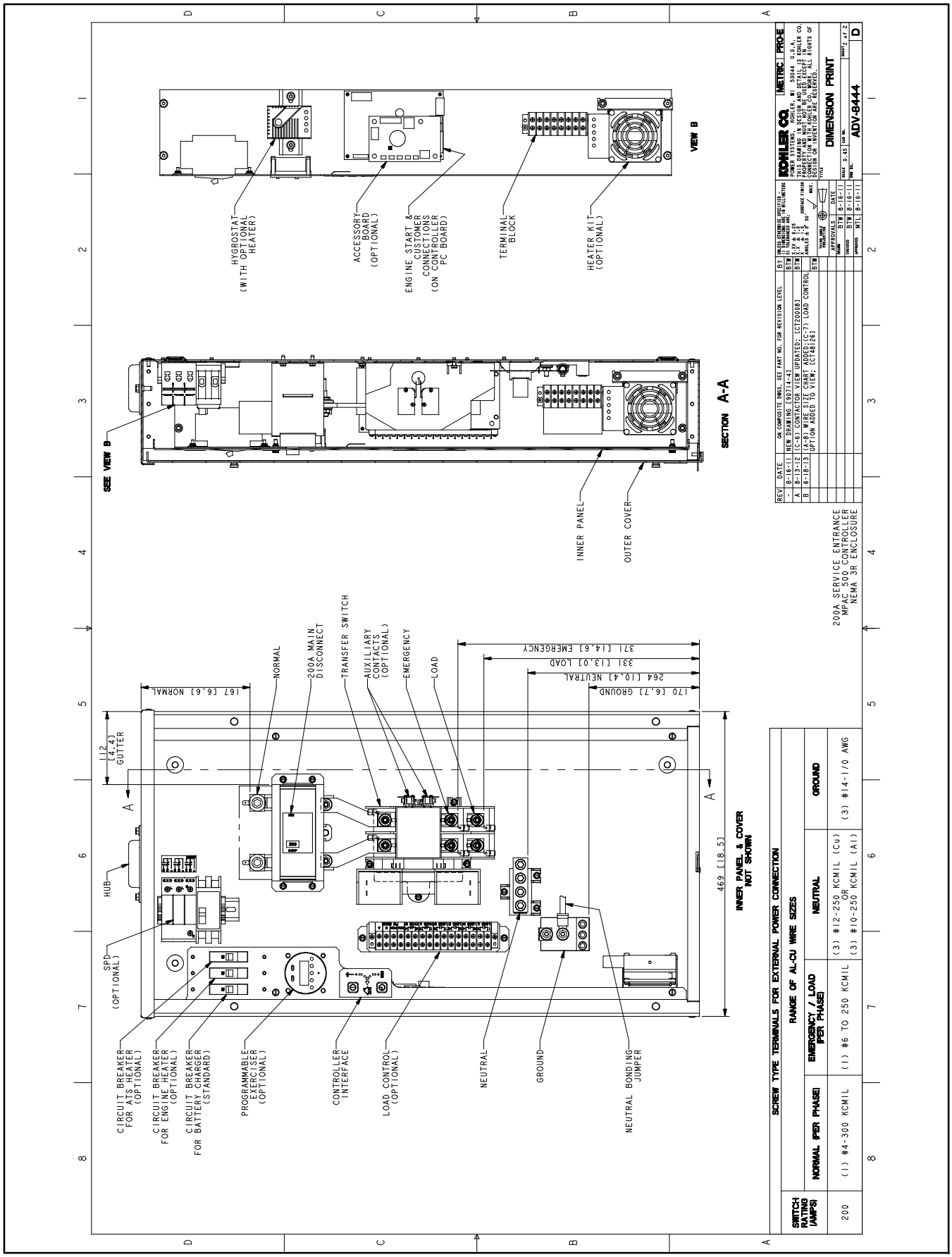

Figure 7-12 Dimension Drawing, 200 Amp Service Entrance Model, ADV-8444, Sheet 2 of 2

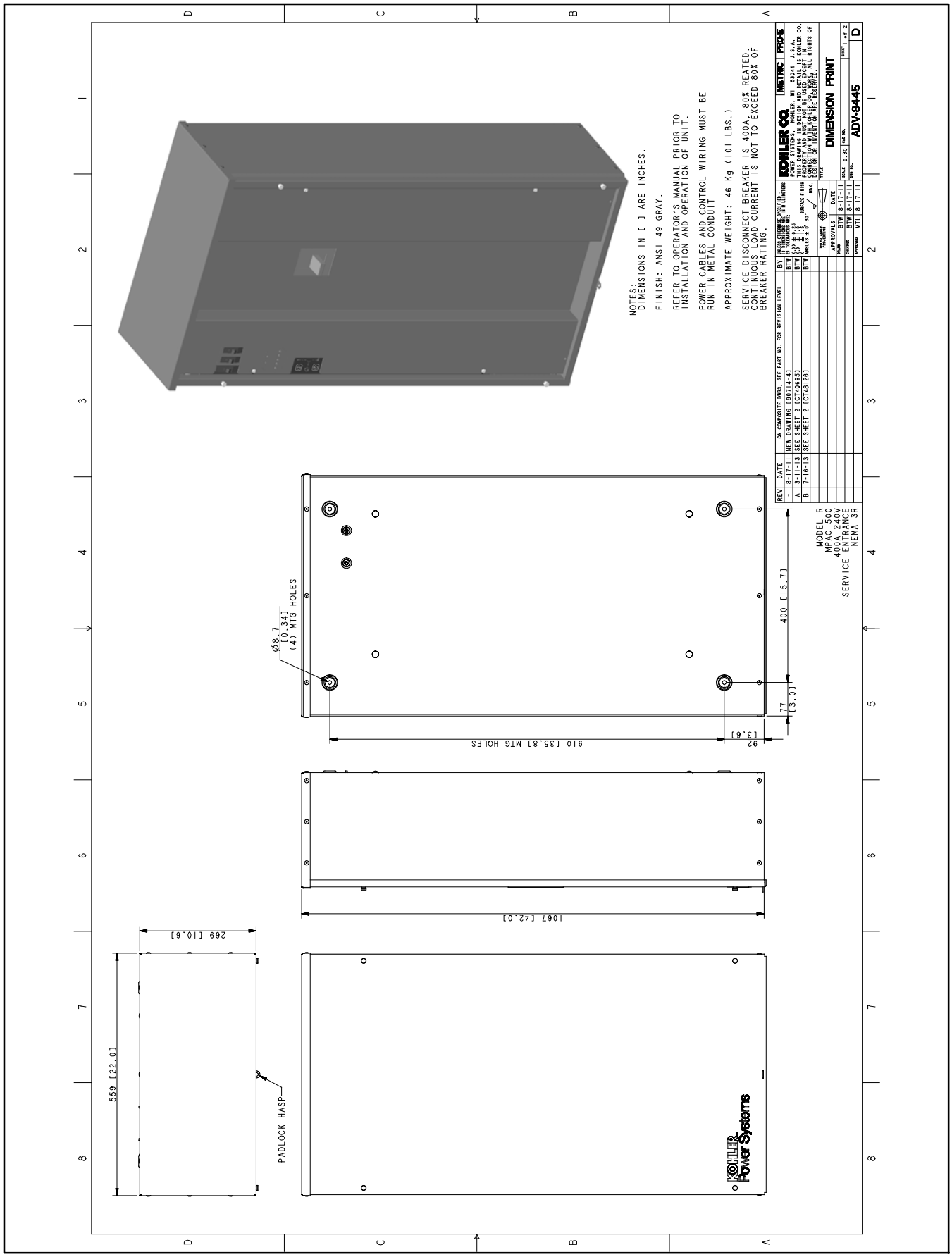

Figure 7-13 Dimension Drawing, 400 Amp Service Entrance Model, ADV-8445, Sheet 1 of 2

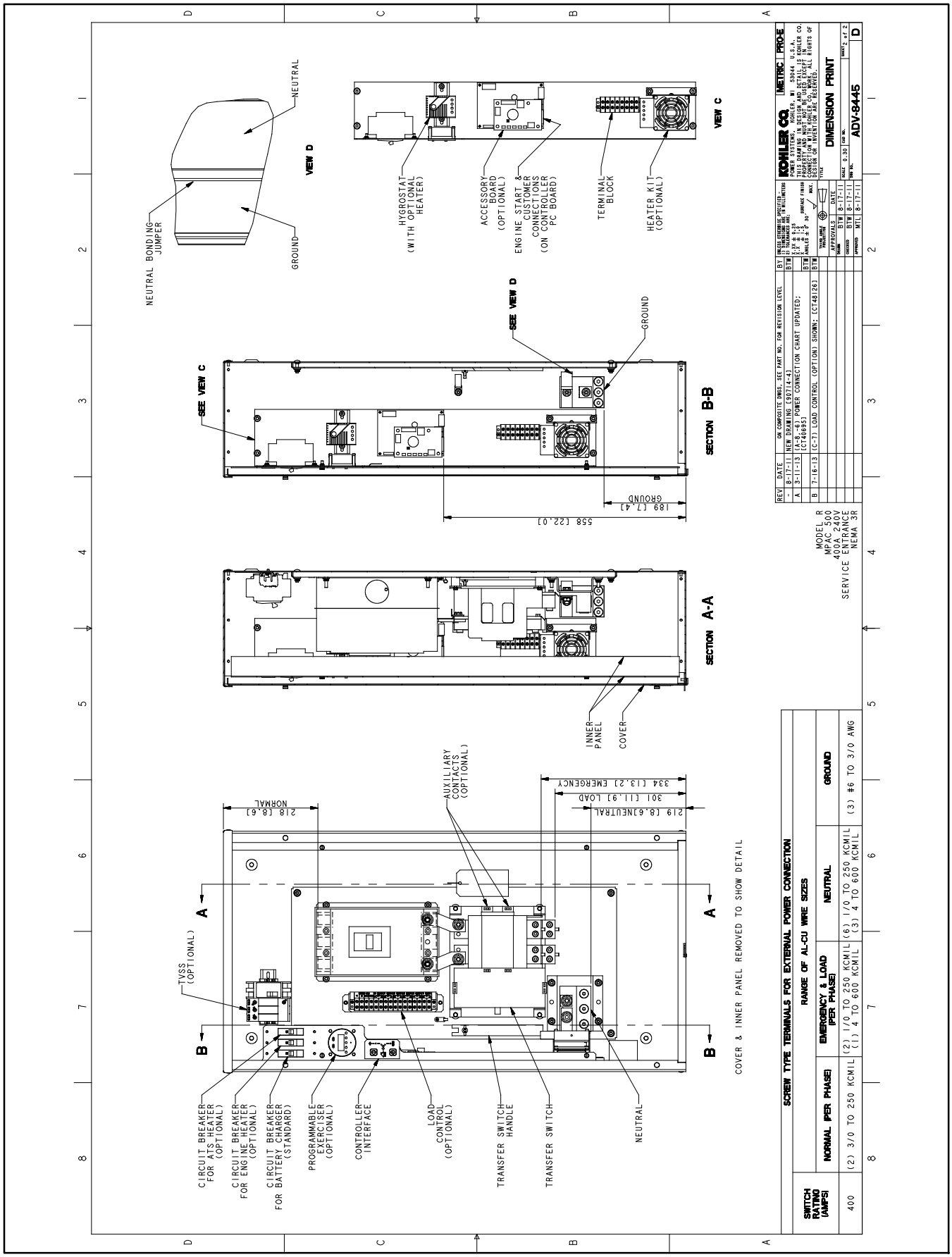

Figure 7-14 Dimension Drawing, 400 Amp Service Entrance Model, ADV-8445, Sheet 2 of 2

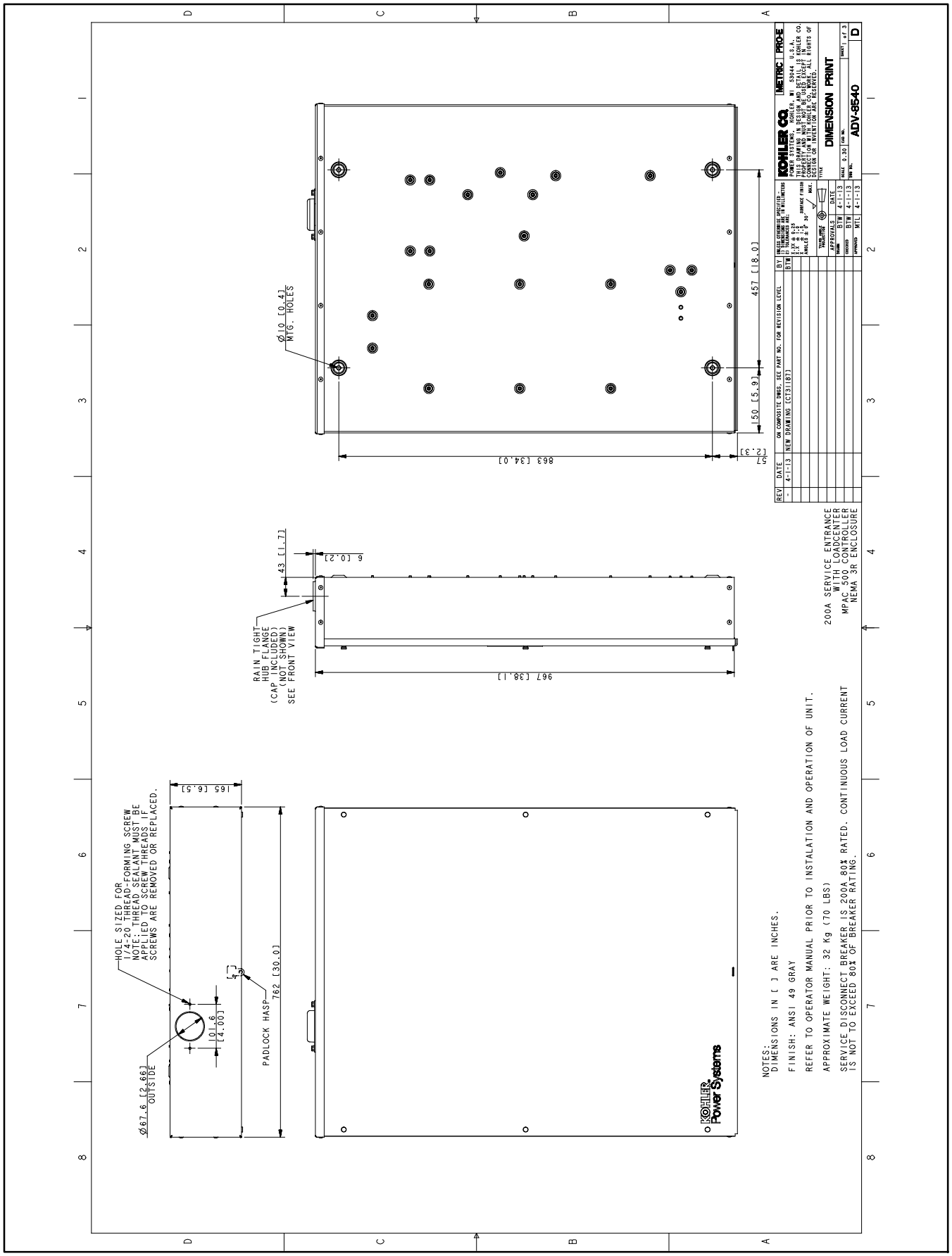

Figure 7-15 Dimension Drawing, 200 Amp Service Entrance Model with Load Center, ADV-8540, Sheet 1 of 3

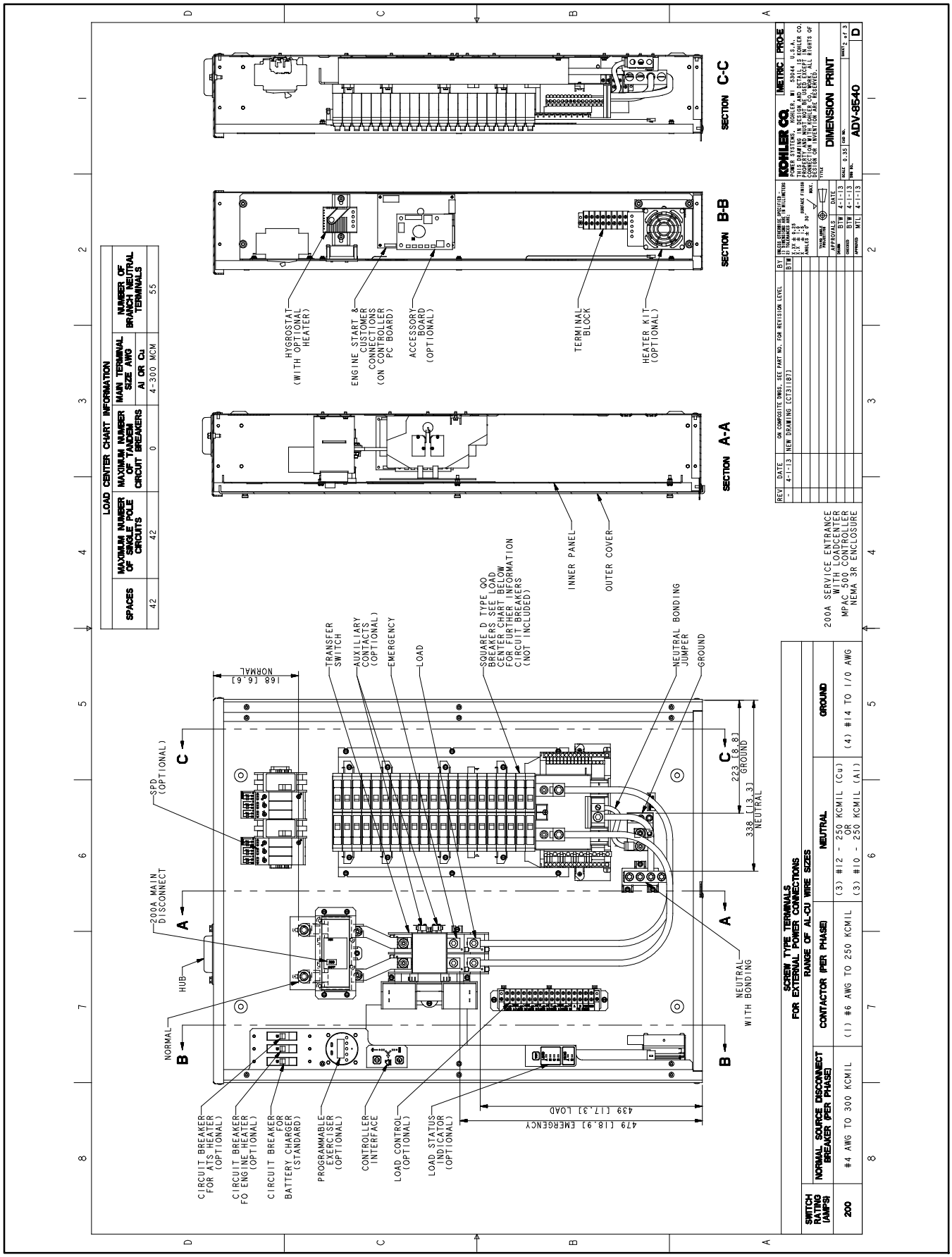

Figure 7-16 Dimension Drawing, 200 Amp Service Entrance Model with Load Center, ADV-8540, Sheet 2 of 3

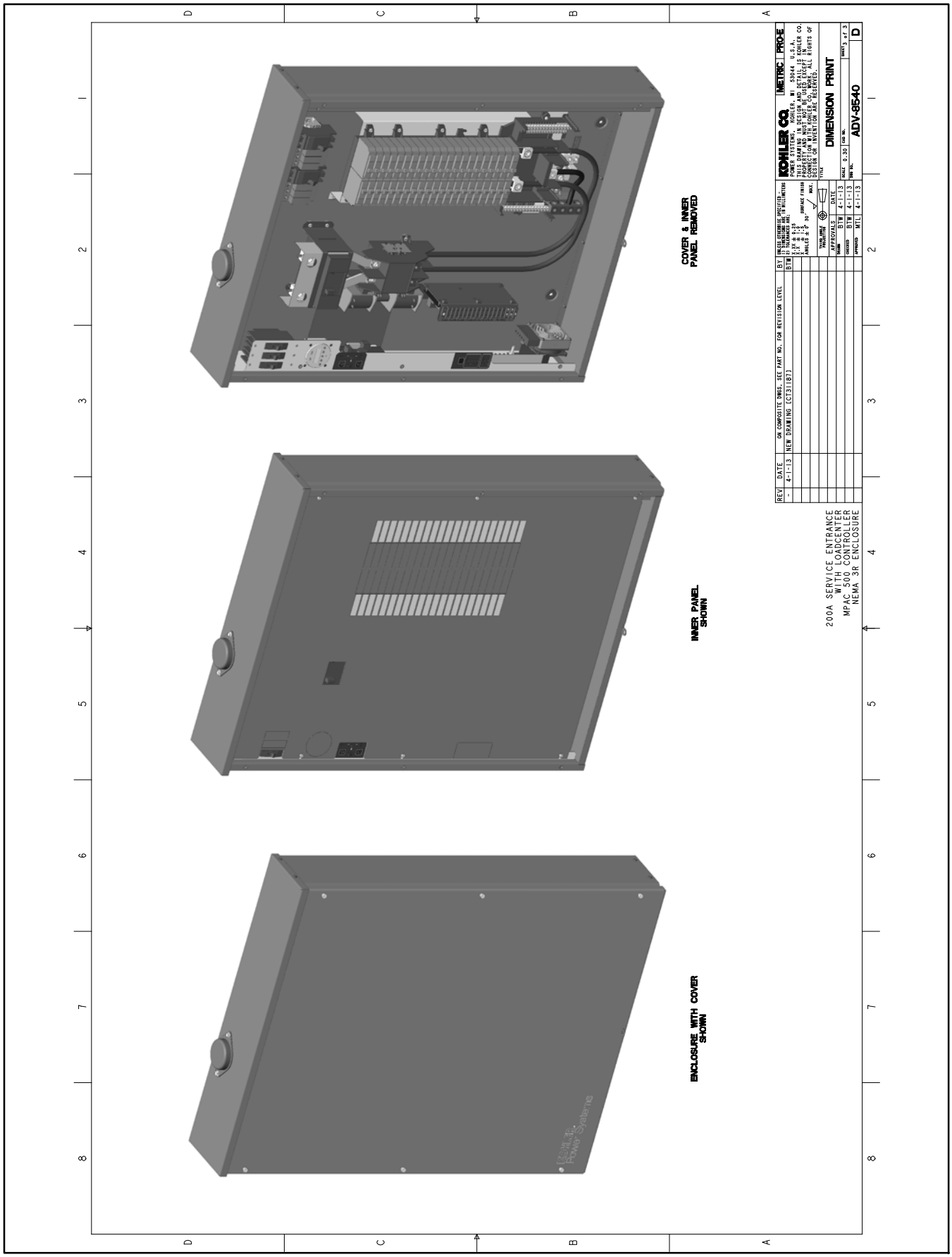

Figure 7-17 Dimension Drawing, 200 Amp Service Entrance Model with Load Center, ADV-8540, Sheet 3 of 3

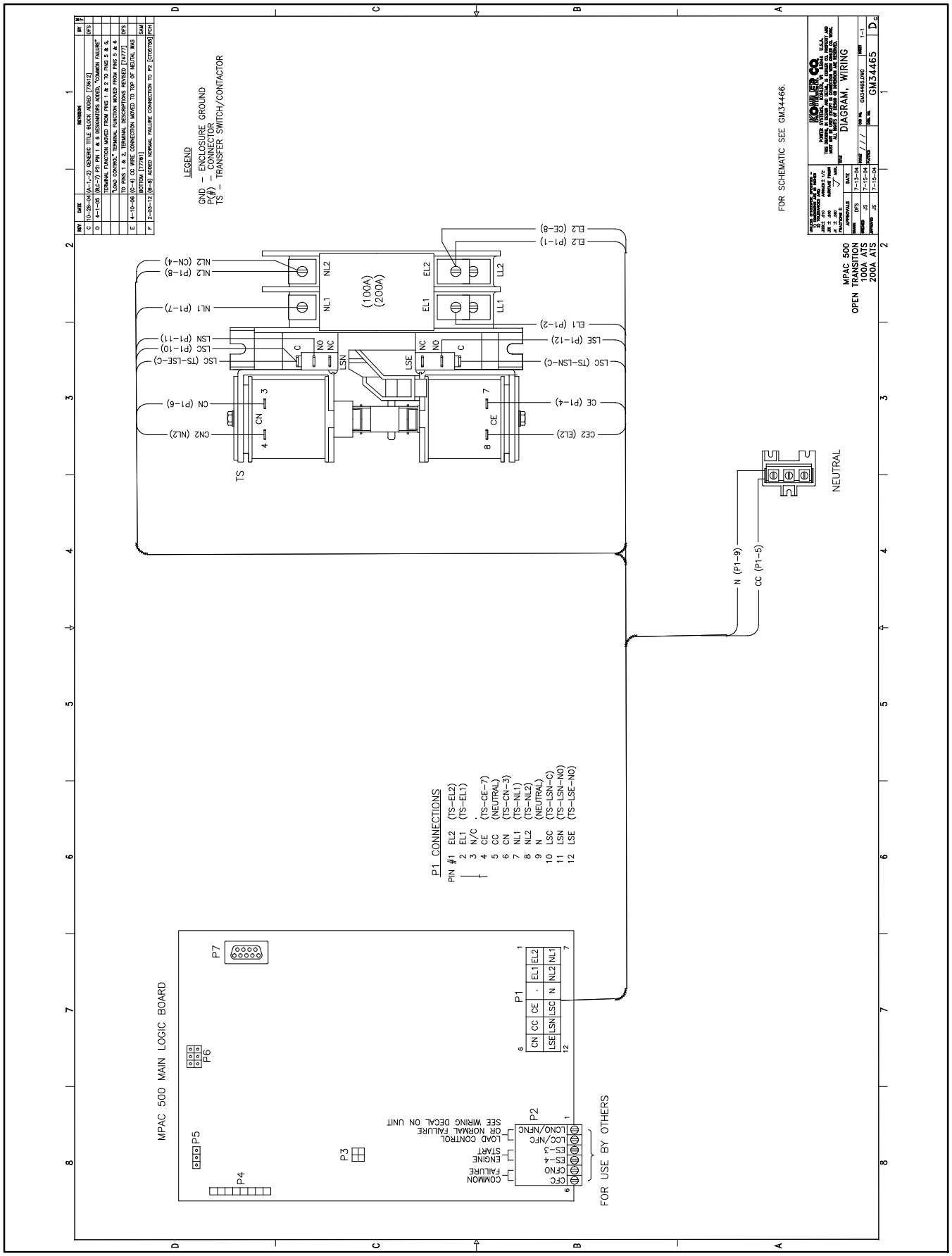

Figure 7-18 Wiring Diagram, 100/200 amp without Load Center, GM34465

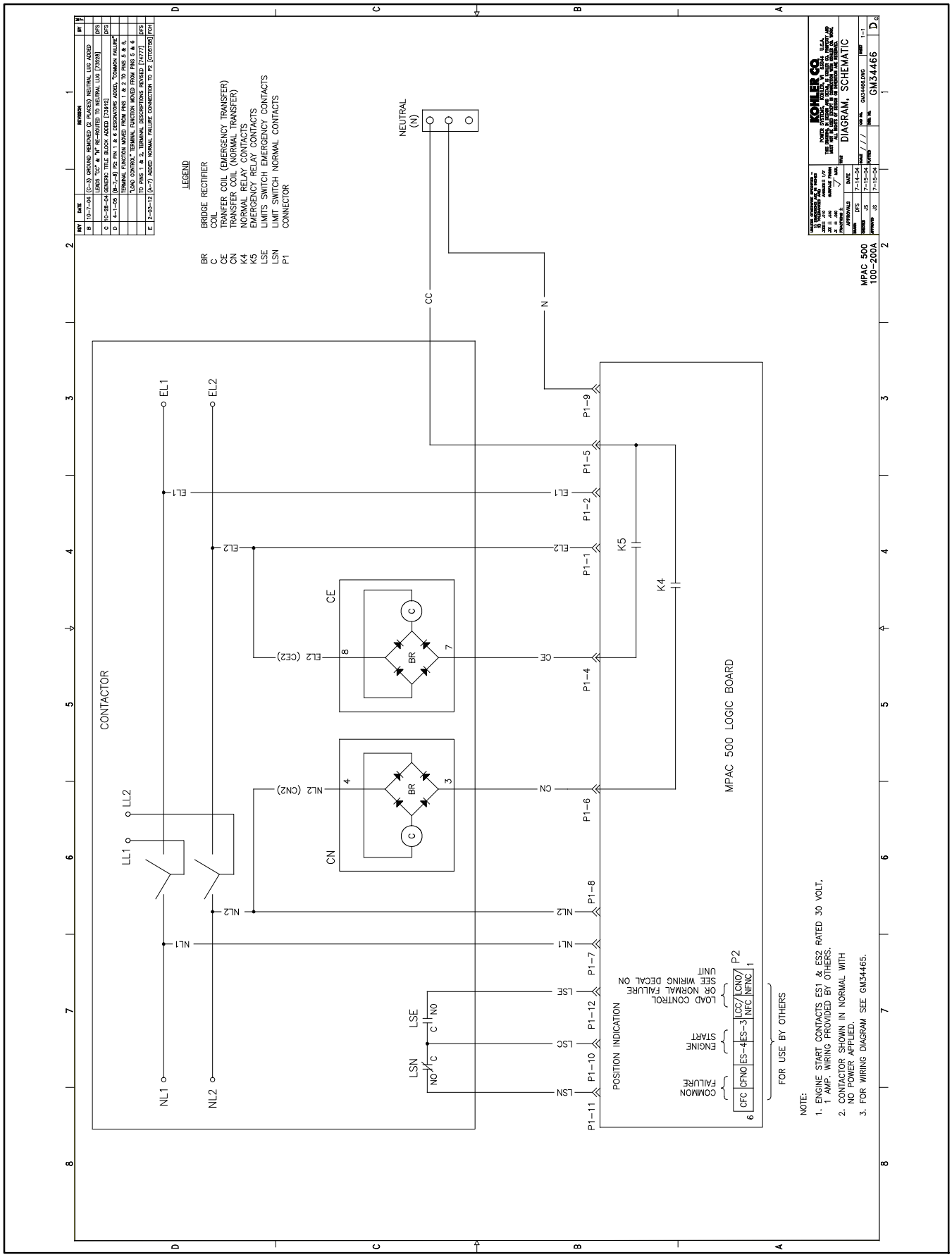

Figure 7-19 Schematic Diagram, 100/200 Amp without Load Center, GM34466

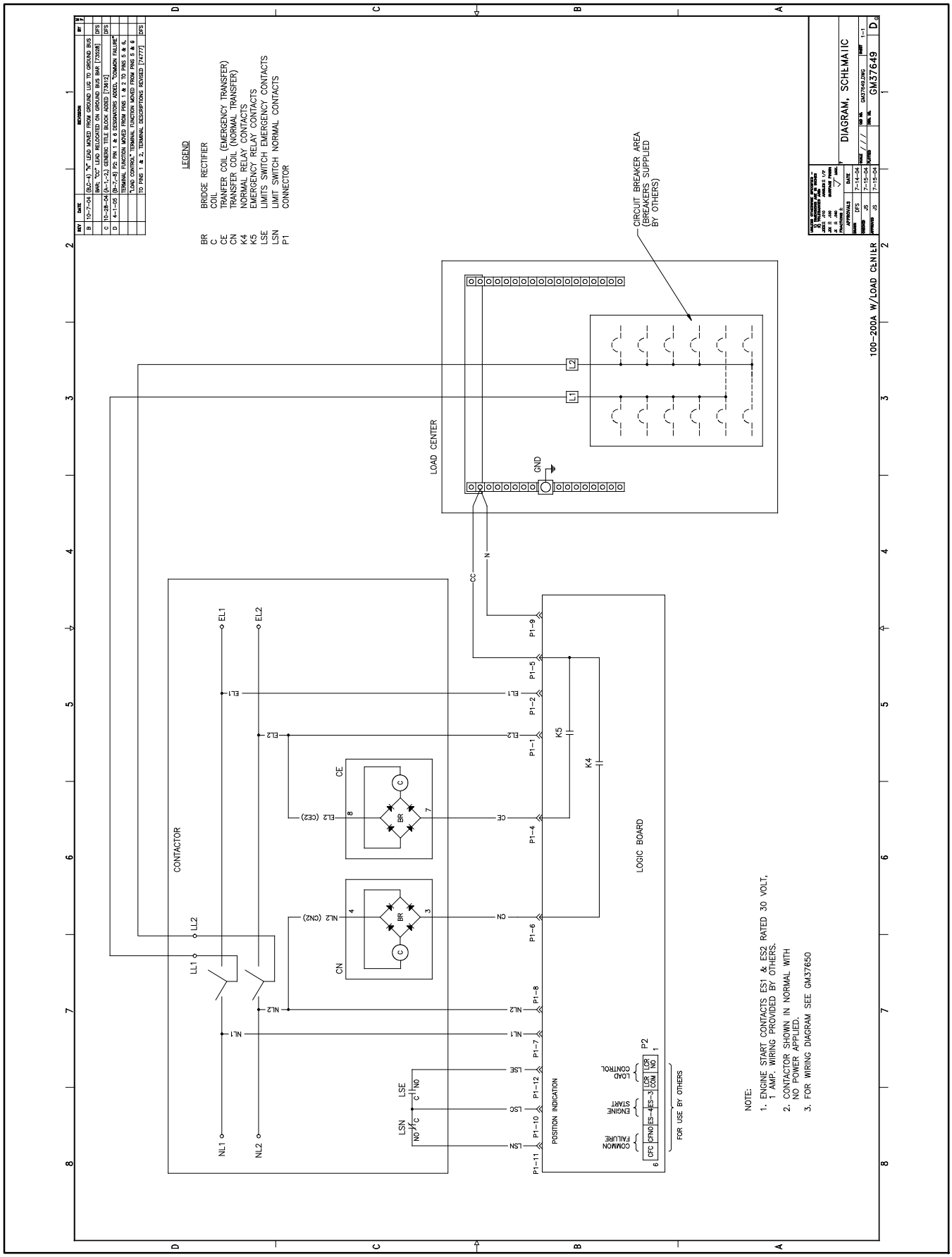

Figure 7-20 Schematic Diagram, 100/200 Amp with Load Center, GM37649

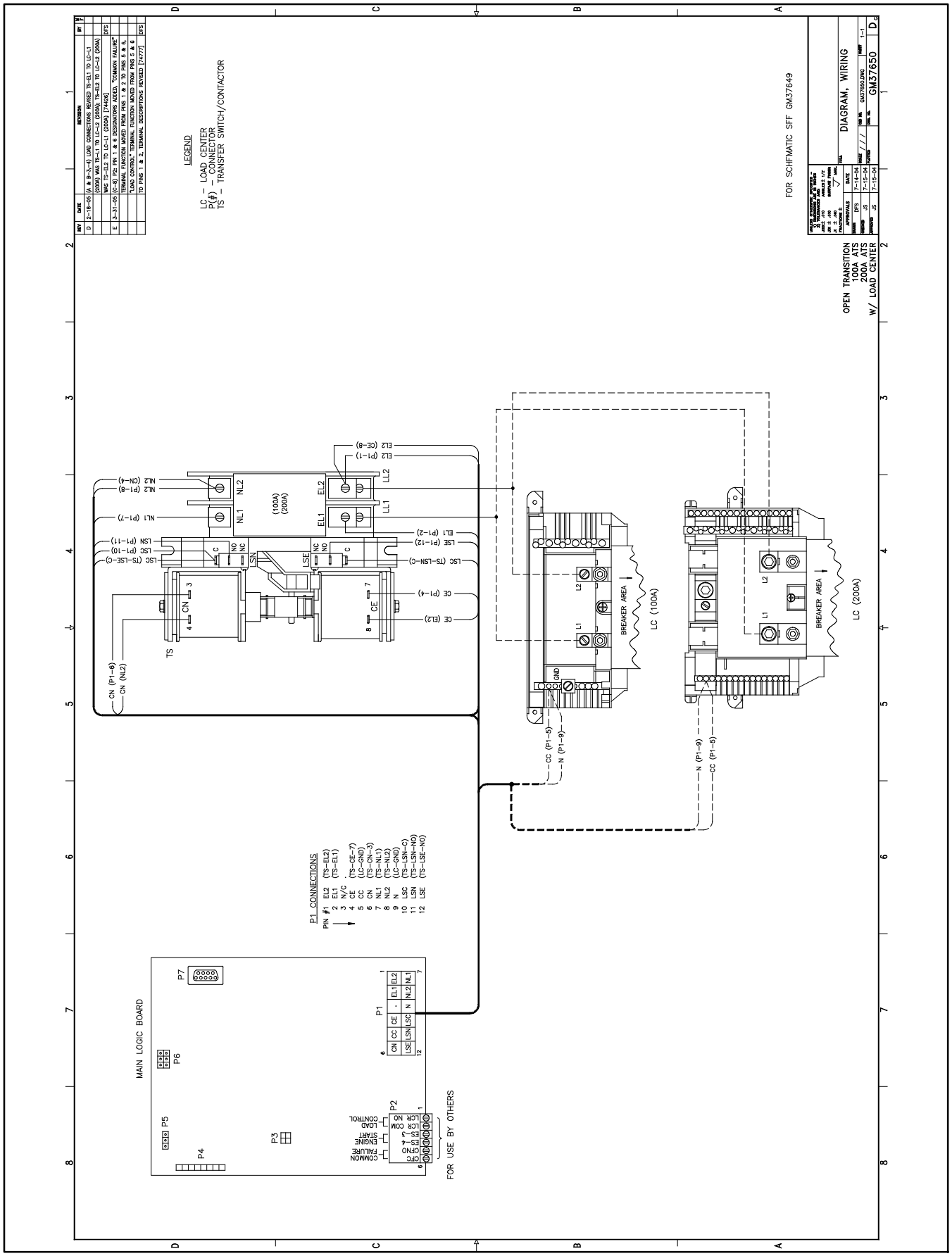

Figure 7-21 Wiring Diagram, 100/200 Amp with Load Center, GM37650

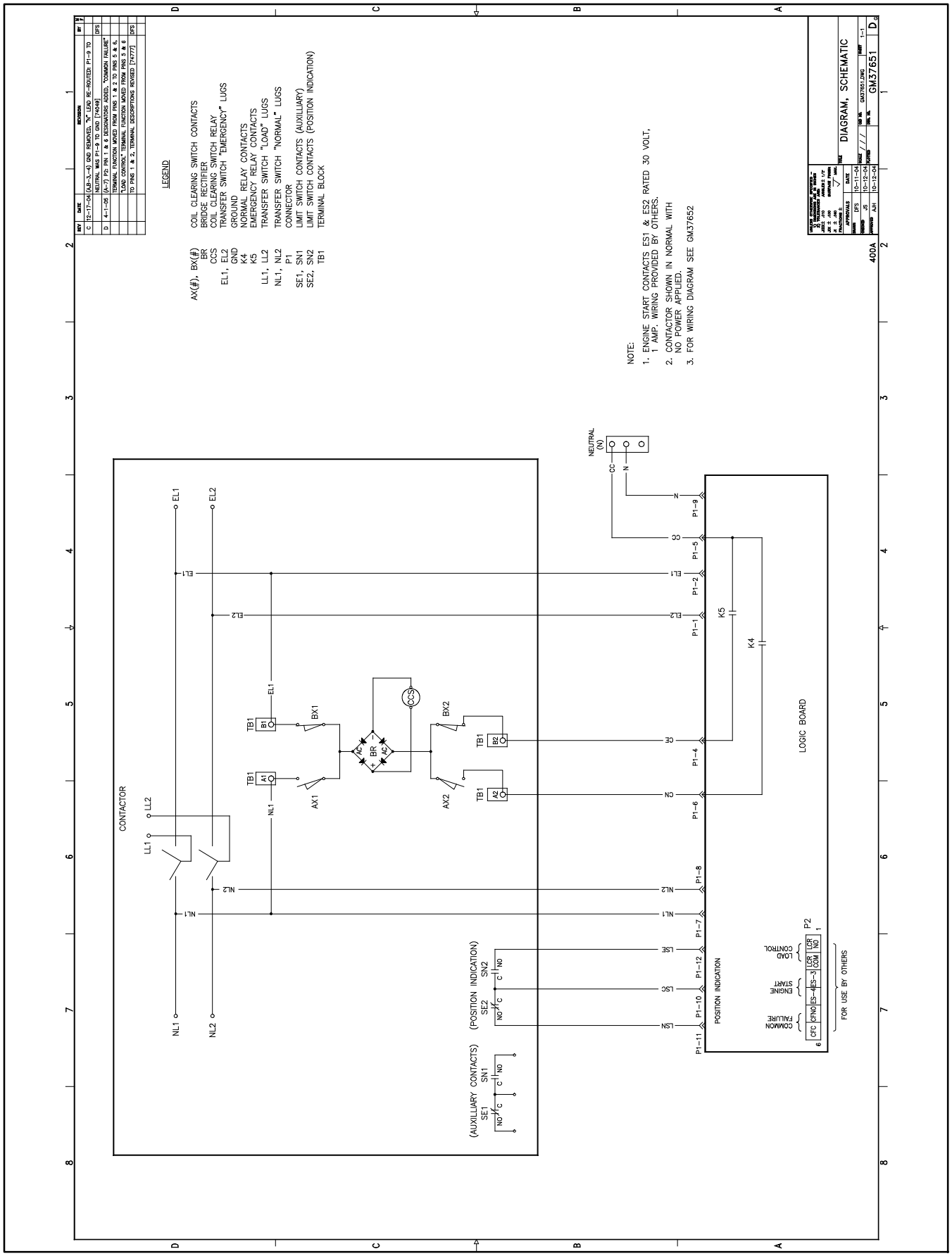

Figure 7-22 Schematic Diagram, 400 Amp, GM37651

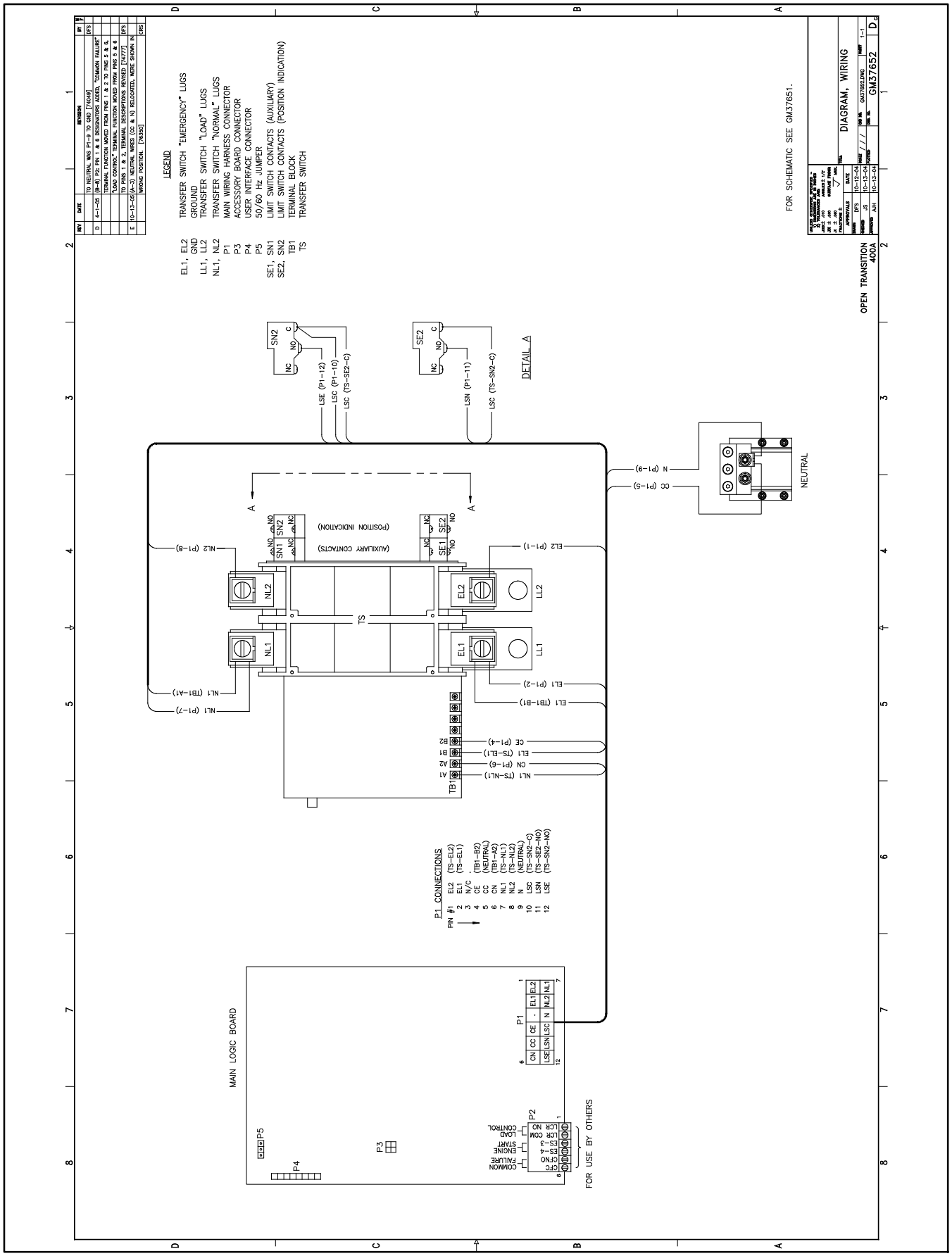

Figure 7-23 Wiring Diagram, 400 Amp, GM37652

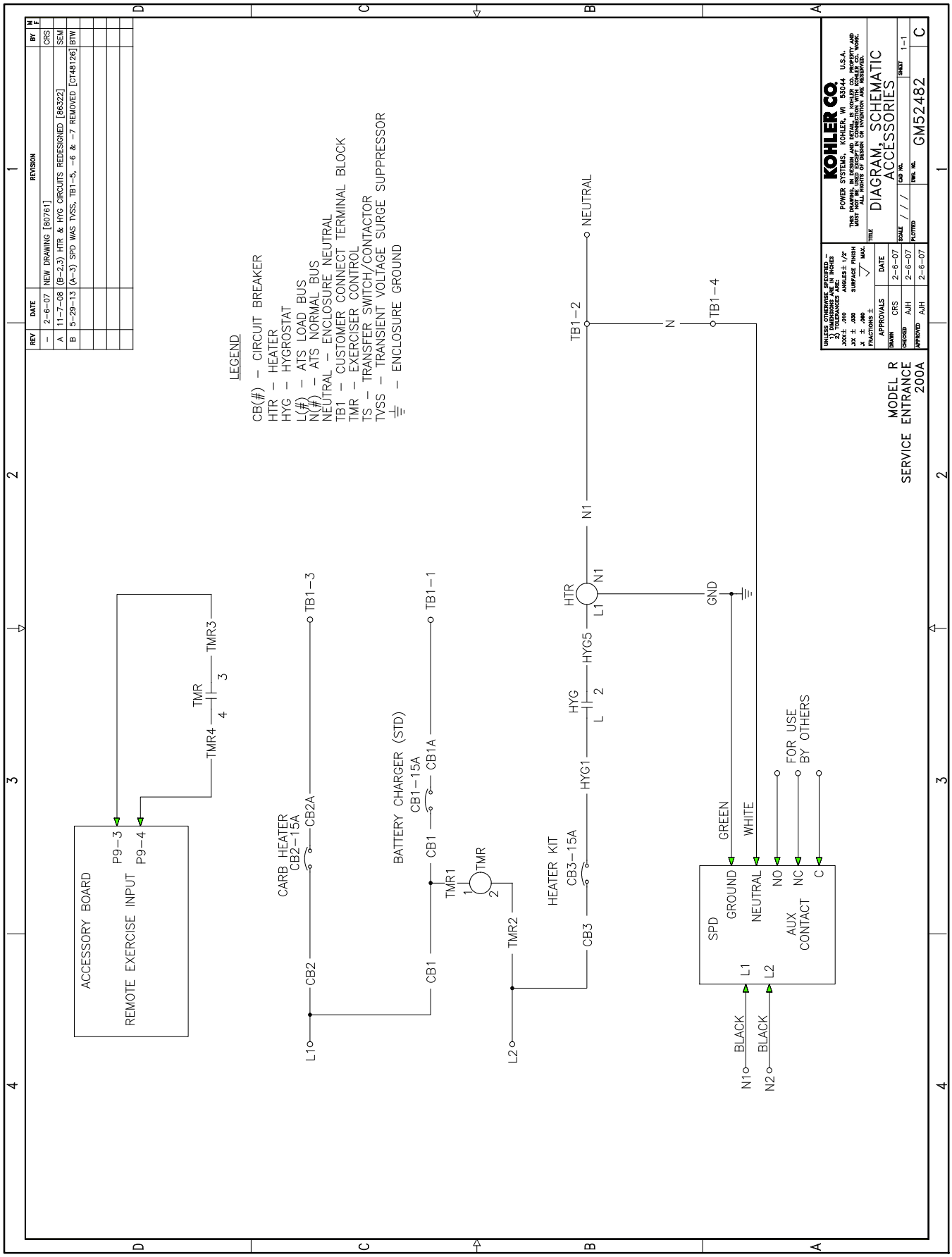

Figure 7-24 Schematic Diagram, 200 Amp Service Entrance Switch Accessories, GM52482

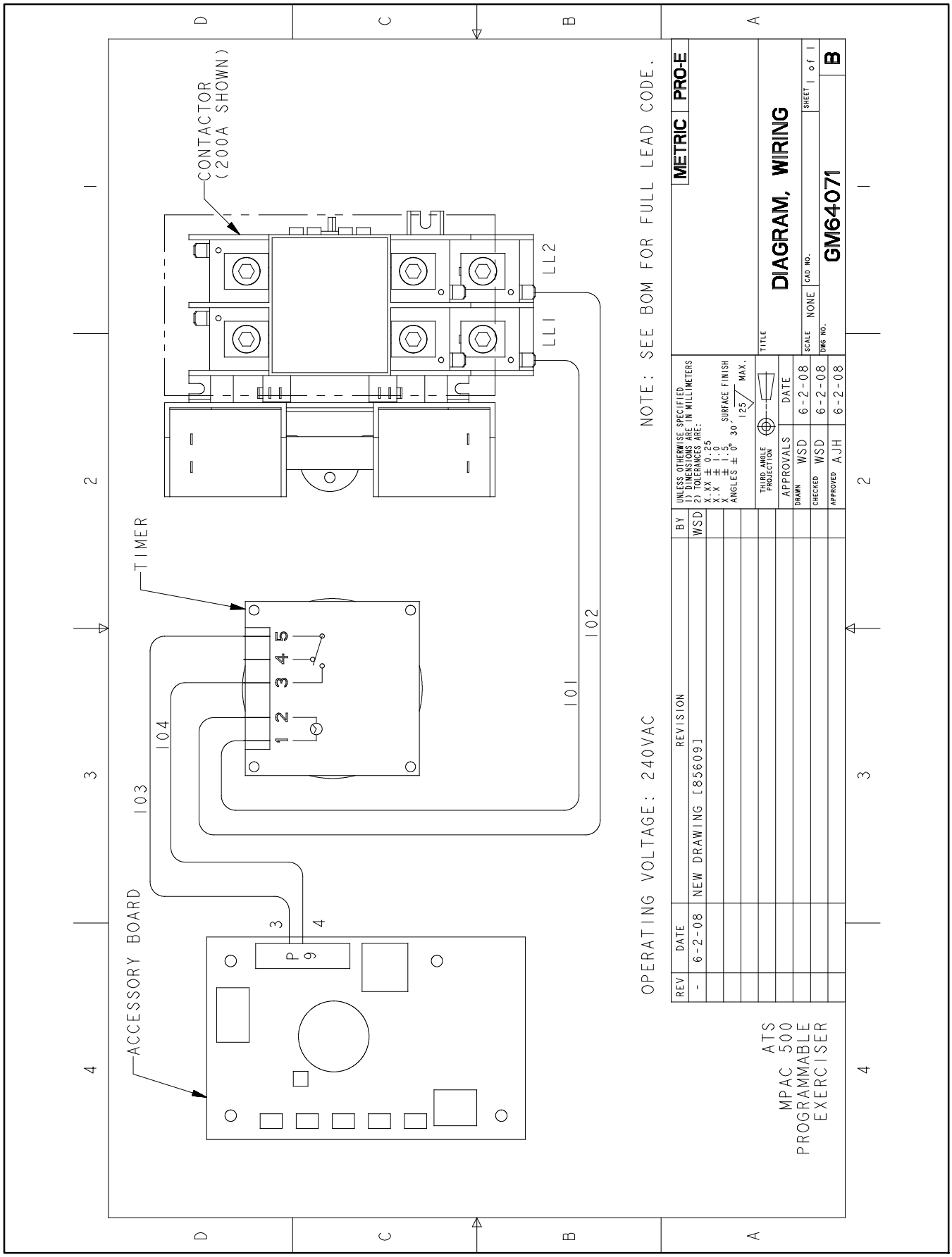

Figure 7-25 Wiring Diagram for Programmable Exerciser GM64027 and GM64028, Drawing GM64071

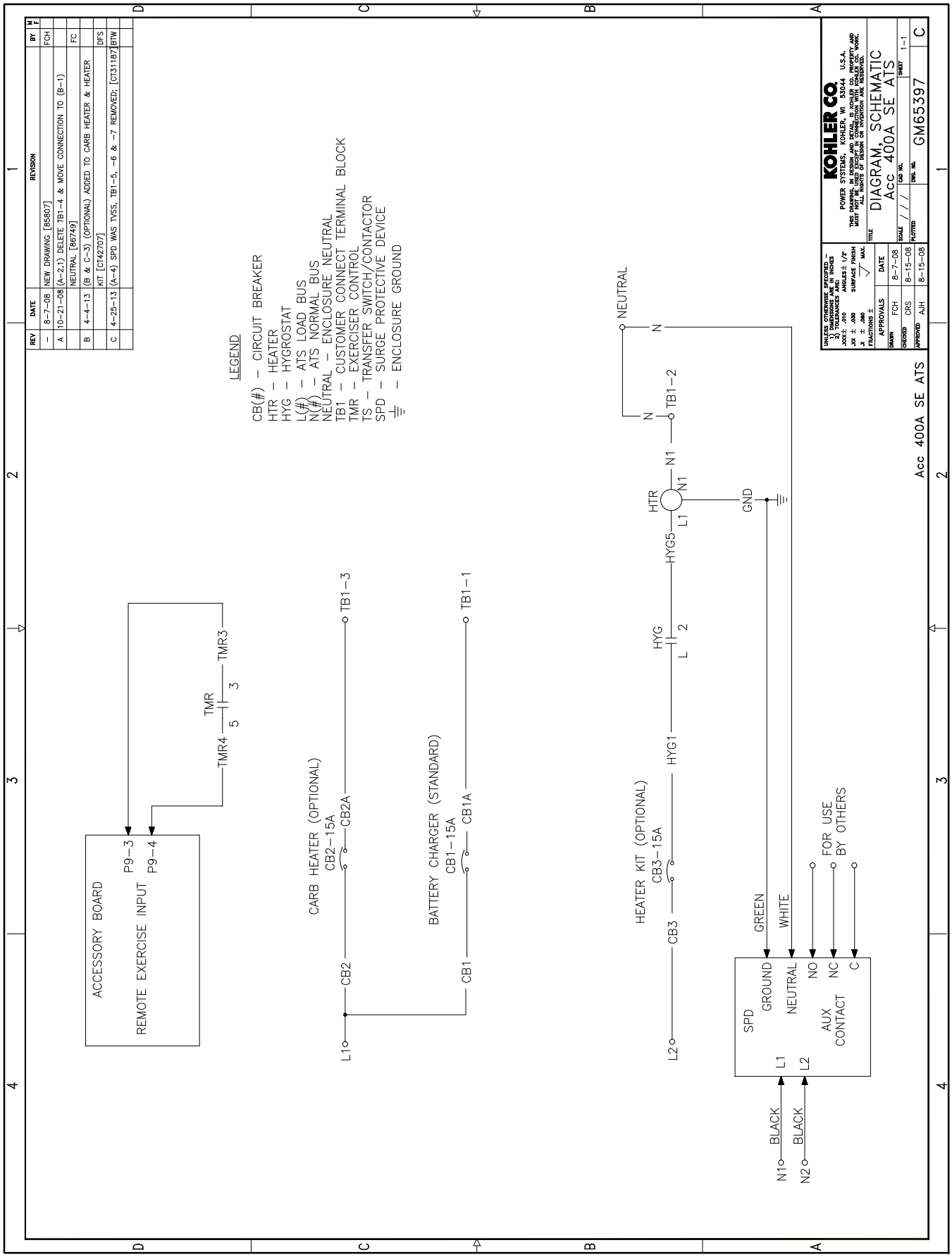

Figure 7-26 Schematic Diagram, 400 Amp Service Entrance Switch Accessories, GM65397

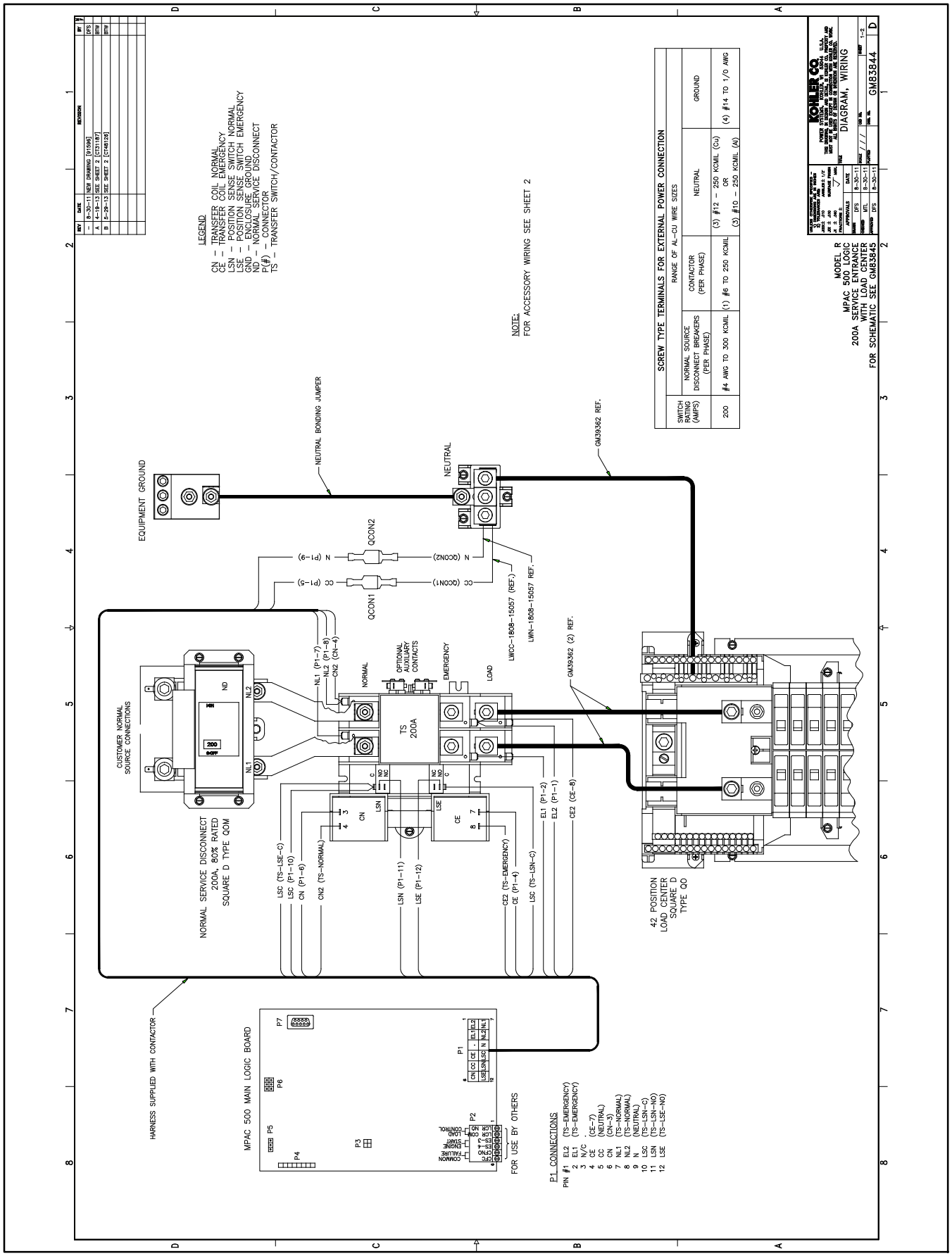

Figure 7-27 Wiring Diagram, 200 Amp Service Entrance Switch with Load Center, GM83844, Sheet 1 of 2

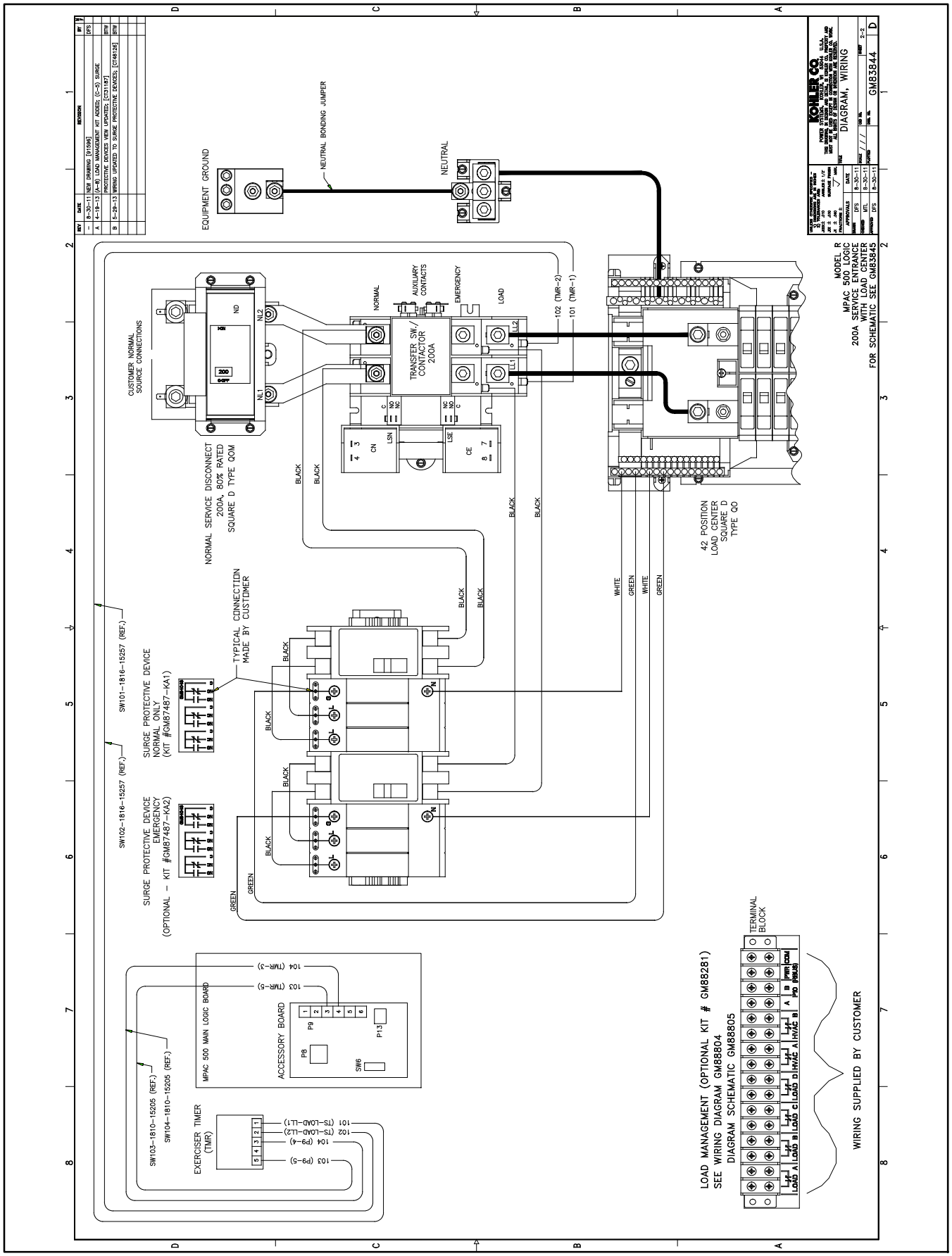

Figure 7-28 Wiring Diagram, 200 Amp Service Entrance Switch with Load Center, GM83844, Sheet 2 of 2

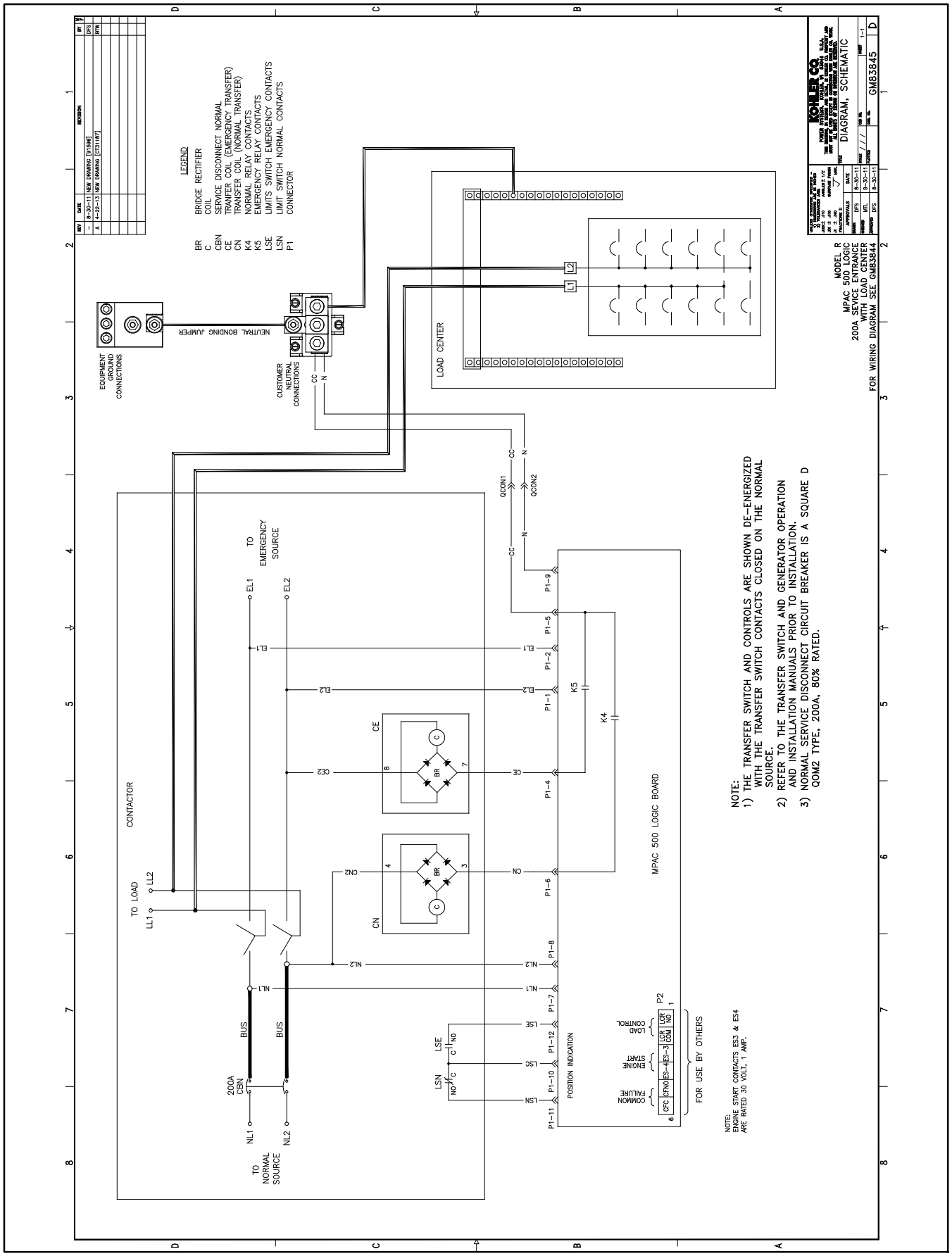

Figure 7-29 Schematic Diagram, 200 Amp Service Entrance Switch with Load Center, GM83845

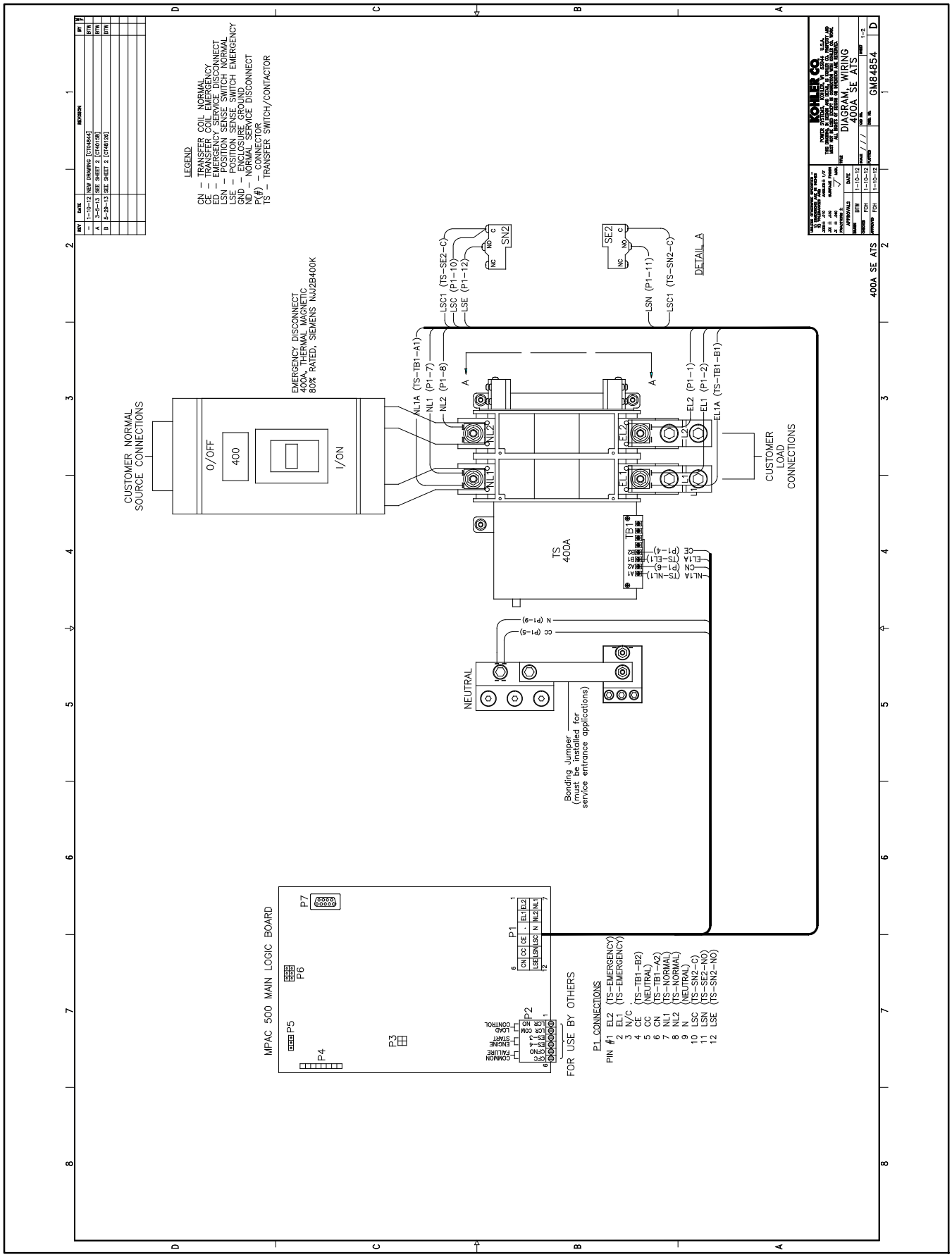

Figure 7-30 Wiring Diagram, 400 Amp Service Entrance Switch, GM84854, Sheet 1 of 2

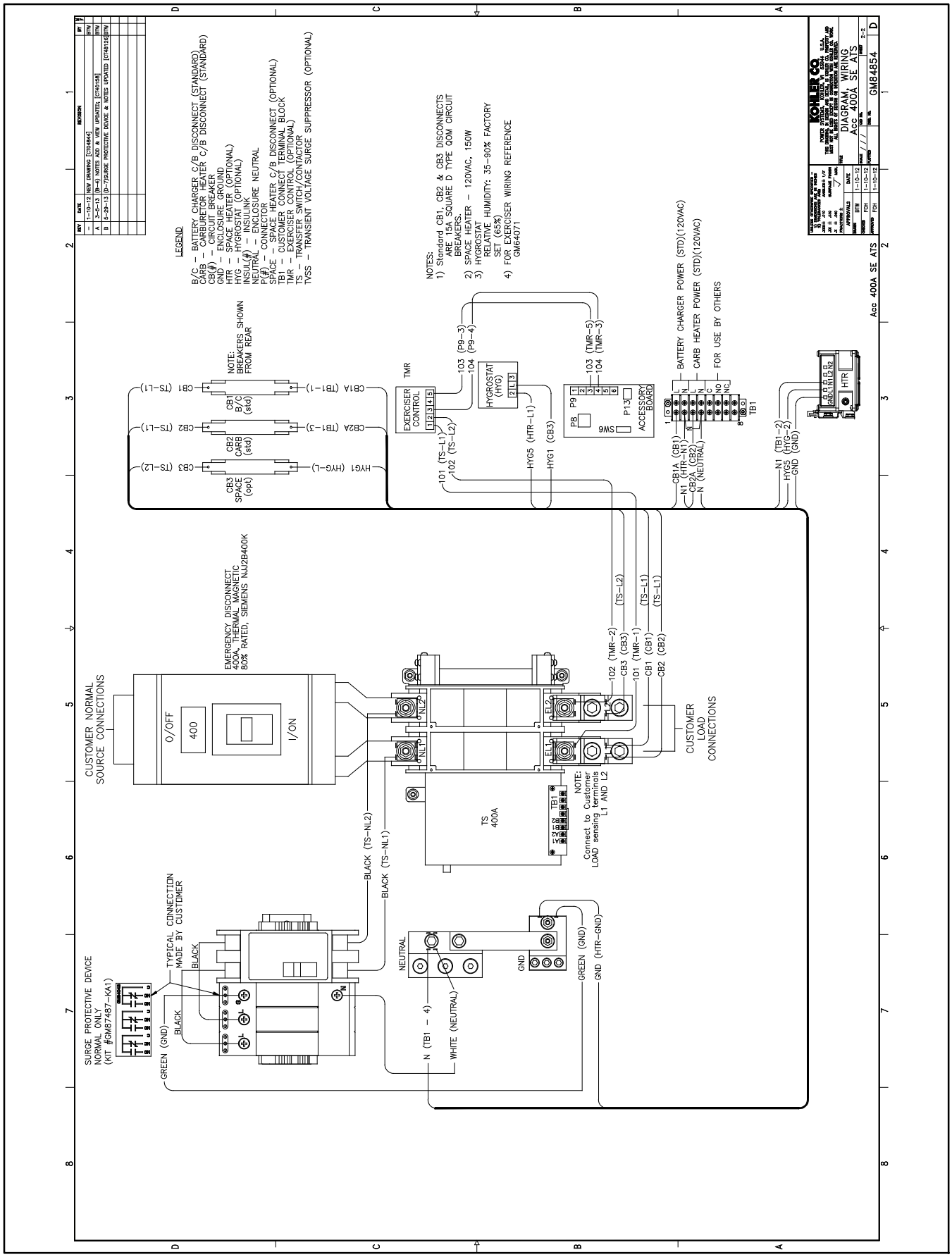

Figure 7-31 Wiring Diagram, 400 Amp Service Entrance Switch Accessories, GM84854, Sheet 2 of 2

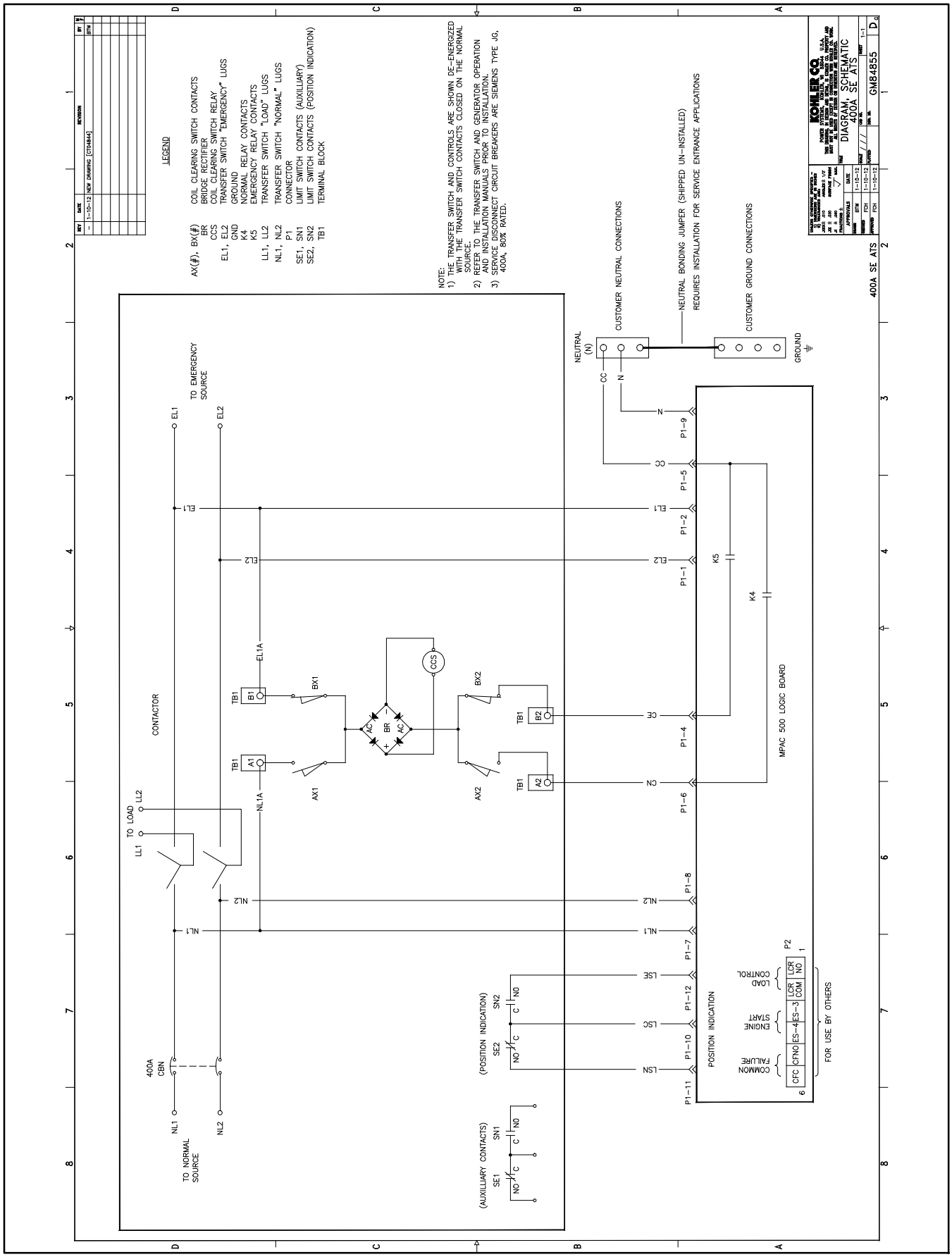

Figure 7-32 Schematic Diagram, 400 Amp Service Entrance Switch, GM84855

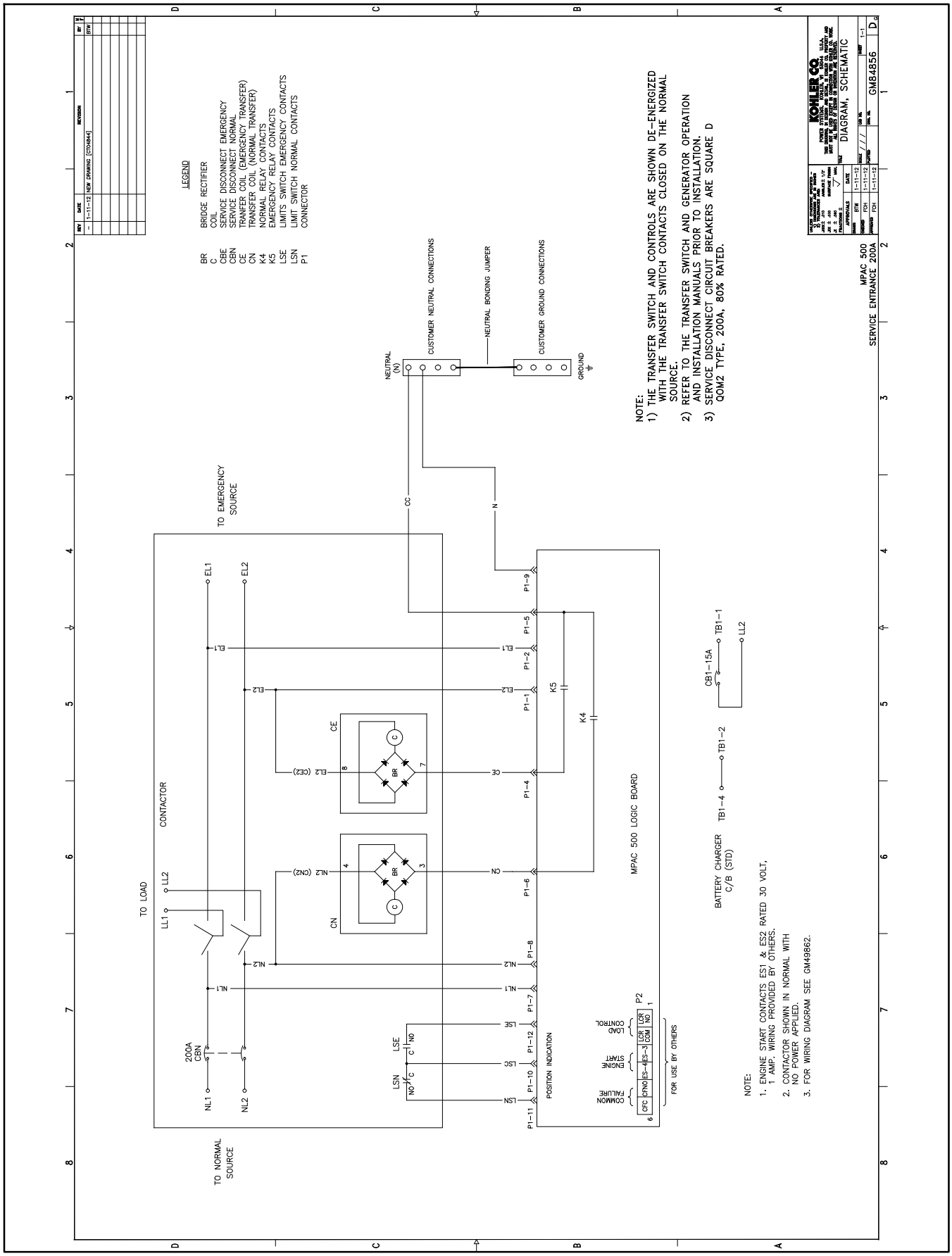

Figure 7-33 Schematic Diagram, 200 Amp Service Entrance Switch, GM84856

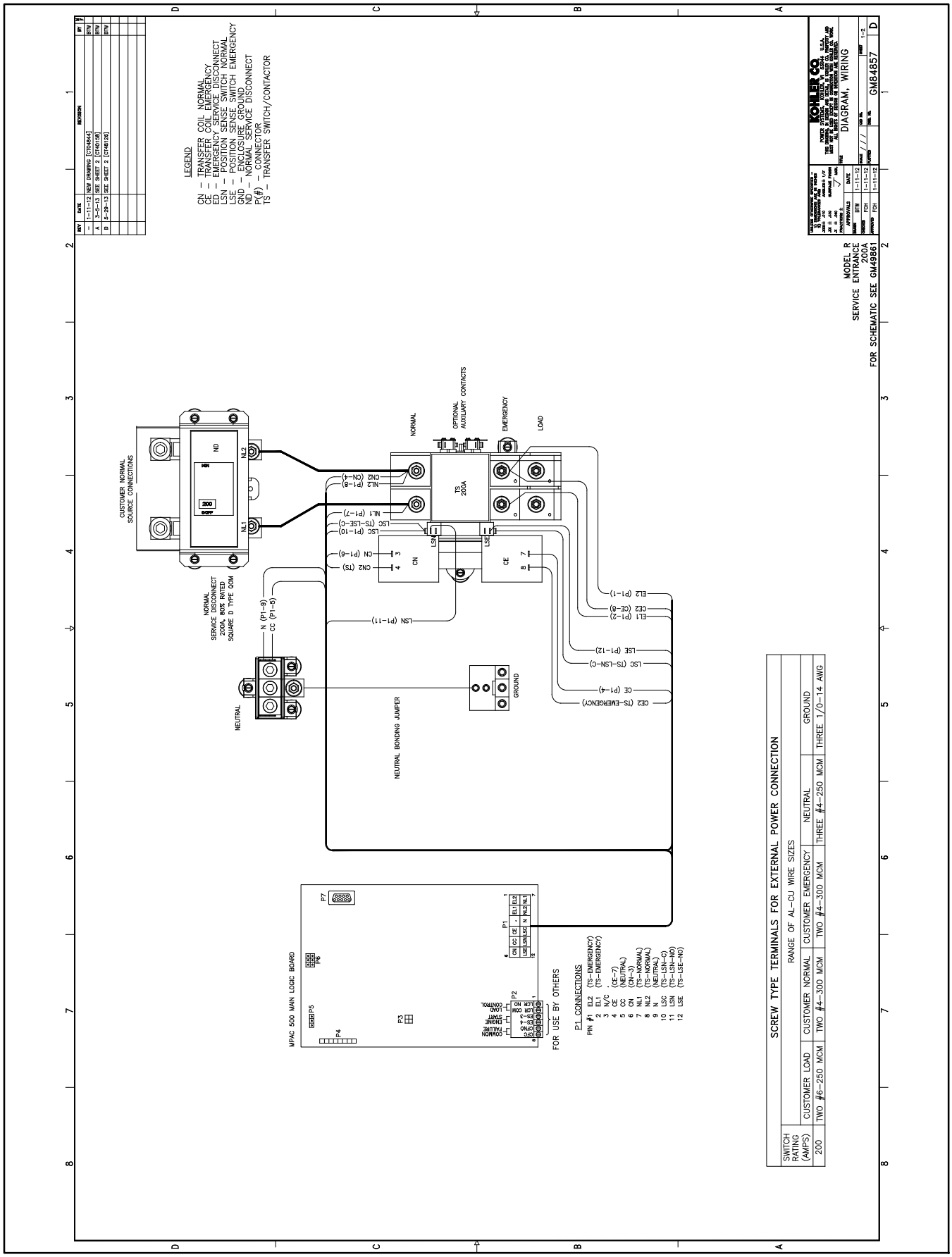

Figure 7-34 Wiring Diagram, 200 Amp Service Entrance Switch, GM84857, Sheet 1 of 2

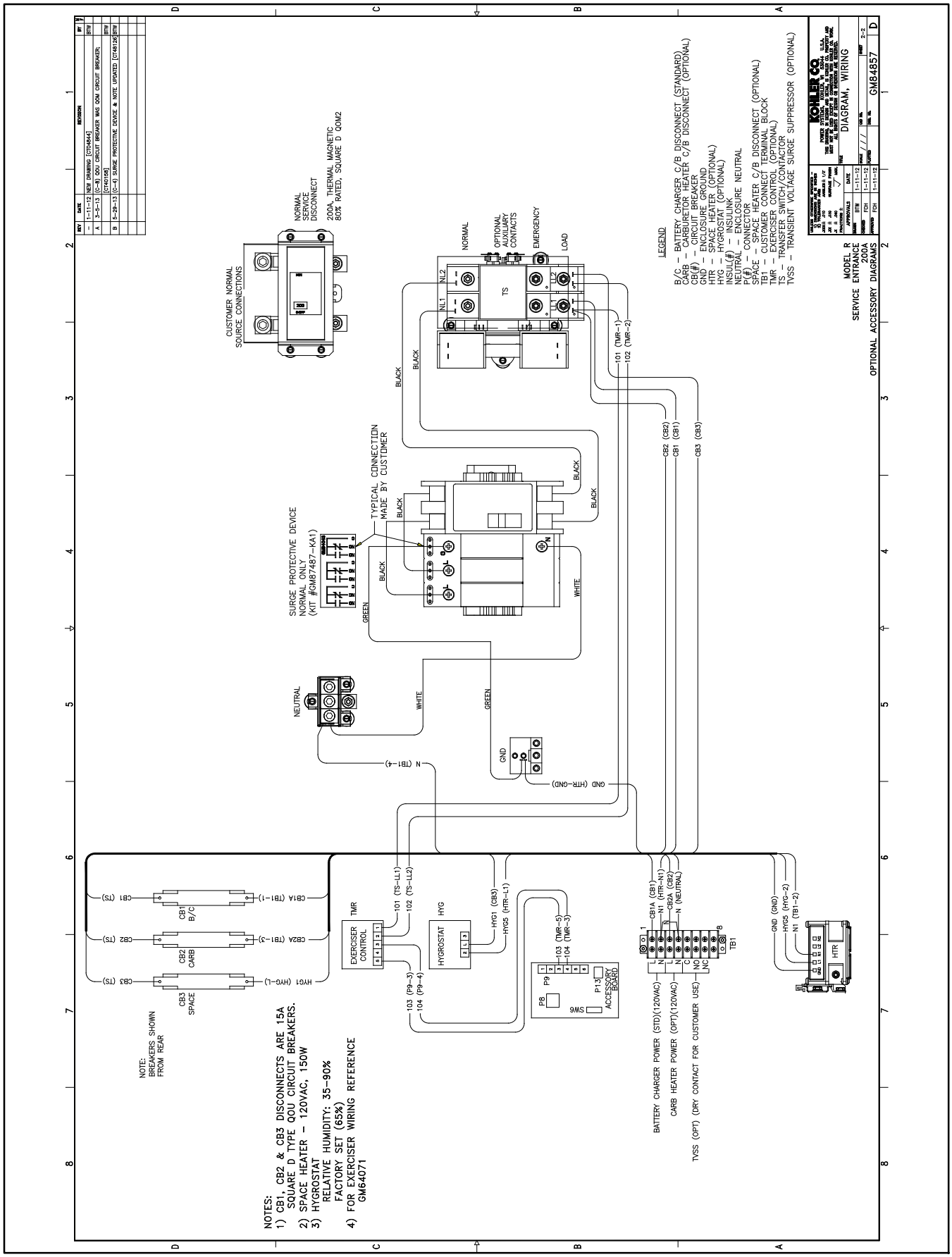

Figure 7-35 Wiring Diagram, 200 Amp Service Entrance Switch, GM84857, Sheet 2 of 2

Appendix A Abbreviations

The following list contains abbreviations that may appear in this publication.

A, amp	ampere
ABDC	after bottom dead center
AC	alternating current
A/D	analog to digital
ADC	advanced digital control; analog to digital converter
adj.	adjust, adjustment
ADV	advertising dimensional drawing
Ah	amp-hour
AHWT	anticipatory high water temperature
AISI	American Iron and Steel Institute
ALOP	anticipatory low oil pressure
alt.	alternator
Al	aluminum
ANSI	American National Standards Institute (formerly American Standards Association, ASA)
AO	anticipatory only
APDC	Air Pollution Control District
API	American Petroleum Institute
approx.	approximate, approximately
AQMD	Air Quality Management District
AR	as required, as requested
AS	as supplied, as stated, as suggested
ASE	American Society of Engineers
ASME	American Society of Mechanical Engineers
assy.	assembly
ASTM	American Society for Testing Materials
ATDC	after top dead center
ATS	automatic transfer switch
auto.	automatic
aux.	auxiliary
avg.	average
AVR	automatic voltage regulator
AWG	American Wire Gauge
AWM	appliance wiring material
bat.	battery
BBDC	before bottom dead center
BC	battery charger, battery charging
BCA	battery charging alternator
BCI	Battery Council International
BDC	before dead center
BHP	brake horsepower
blk.	black (paint color), block (engine)
blk. htr.	block heater
BMEP	brake mean effective pressure
bps	bits per second
br.	brass
BTDC	before top dead center
Btu	British thermal unit
Btu/min.	British thermal units per minute
C	Celsius, centigrade
cal.	calorie
CAN	controller area network
CARB	California Air Resources Board
CB	circuit breaker
cc	cubic centimeter
CCA	cold cranking amps
ccw.	counterclockwise
CEC	Canadian Electrical Code
cert.	certificate, certification, certified
cfh	cubic feet per hour
cfm	cubic feet per minute
CG	center of gravity
CID	cubic inch displacement
CL	centerline
cm	centimeter
CMOS	complementary metal oxide substrate (semiconductor)
cogen.	cogeneration
com	communications (port)
coml	commercial
Coml/Rec	Commercial/Recreational
conn.	connection
cont.	continued
CPVC	chlorinated polyvinyl chloride
crit.	critical
CRT	cathode ray tube
CSA	Canadian Standards Association
CT	current transformer
Cu	copper
cUL	Canadian Underwriter's Laboratories
CUL	Canadian Underwriter's Laboratories
cu. in.	cubic inch
cw.	clockwise
CWC	city water-cooled
cyl.	cylinder
D/A	digital to analog
DAC	digital to analog converter
dB	decibel
dB(A)	decibel (A weighted)
DC	direct current
DCR	direct current resistance
deg., °	degree
dept.	department
DFMEA	Design Failure Mode and Effects Analysis
dia.	diameter
DI/EO	dual inlet/end outlet
DIN	Deutsches Institut fur Normung e. V. (also Deutsche Industrie Normenausschuss)
DIP	dual inline package
DPDT	double-pole, double-throw
DPST	double-pole, single-throw
DS	disconnect switch
DVR	digital voltage regulator
E, emer.	emergency (power source)
ECM	electronic control module, engine control module
EDI	electronic data interchange
EFR	emergency frequency relay
e.g.	for example (*exempli gratia)*
EG	electronic governor
EGSA	Electrical Generating Systems Association
EIA	Electronic Industries Association
EI/EO	end inlet/end outlet
EMI	electromagnetic interference
emiss.	emission
eng.	engine
EPA	Environmental Protection Agency
EPS	emergency power system
ER	emergency relay
ES	engineering special, engineered special
ESD	electrostatic discharge
est.	estimated
E-Stop	emergency stop
etc.	et cetera (and so forth)
exh.	exhaust
ext.	external
F	Fahrenheit, female
fglass.	fiberglass
FHM	flat head machine (screw)
fl. oz.	fluid ounce
flex.	flexible
freq.	frequency
FS	full scale
ft.	foot, feet
ft. lb.	foot pounds (torque)
ft./min.	feet per minute
ftp	file transfer protocol
g	gram
ga.	gauge (meters, wire size)
gal.	gallon
gen.	generator
genset	generator set
GFI	ground fault interrupter
GND, ⏚	ground
gov.	governor
gph	gallons per hour
gpm	gallons per minute
gr.	grade, gross
GRD	equipment ground
gr. wt.	gross weight
H x W x D	height by width by depth
HC	hex cap
HCHT	high cylinder head temperature
HD	heavy duty
HET	high exhaust temp., high engine temp.
hex	hexagon
Hg	mercury (element)
HH	hex head
HHC	hex head cap
HP	horsepower
hr.	hour
HS	heat shrink
hsg.	housing
HVAC	heating, ventilation, and air conditioning
HWT	high water temperature
Hz	hertz (cycles per second)
IC	integrated circuit
ID	inside diameter, identification
IEC	International Electrotechnical Commission
IEEE	Institute of Electrical and Electronics Engineers
IMS	improved motor starting
in.	inch
in. H_2O	inches of water
in. Hg	inches of mercury
in. lb.	inch pounds
Inc.	incorporated
ind.	industrial
int.	internal
int./ext.	internal/external
I/O	input/output
IP	iron pipe
ISO	International Organization for Standardization
J	joule
JIS	Japanese Industry Standard

k	kilo (1000)
K	kelvin
kA	kiloampere
KB	kilobyte (2^{10} bytes)
KBus	Kohler communication protocol
kg	kilogram
kg/cm^2	kilograms per square centimeter
kgm	kilogram-meter
kg/m^3	kilograms per cubic meter
kHz	kilohertz
kJ	kilojoule
km	kilometer
kOhm, kΩ	kilo-ohm
kPa	kilopascal
kph	kilometers per hour
kV	kilovolt
kVA	kilovolt ampere
kVAR	kilovolt ampere reactive
kW	kilowatt
kWh	kilowatt-hour
kWm	kilowatt mechanical
kWth	kilowatt-thermal
L	liter
LAN	local area network
L x W x H	length by width by height
lb.	pound, pounds
lbm/ft^3	pounds mass per cubic feet
LCB	line circuit breaker
LCD	liquid crystal display
ld. shd.	load shed
LED	light emitting diode
Lph	liters per hour
Lpm	liters per minute
LOP	low oil pressure
LP	liquefied petroleum
LPG	liquefied petroleum gas
LS	left side
L_{wa}	sound power level, A weighted
LWL	low water level
LWT	low water temperature
m	meter, milli (1/1000)
M	mega (10^6 when used with SI units), male
m^3	cubic meter
m^3/hr.	cubic meters per hour
m^3/min.	cubic meters per minute
mA	milliampere
man.	manual
max.	maximum
MB	megabyte (2^{20} bytes)
MCCB	molded-case circuit breaker
MCM	one thousand circular mils
meggar	megohmmeter
MHz	megahertz
mi.	mile
mil	one one-thousandth of an inch
min.	minimum, minute
misc.	miscellaneous
MJ	megajoule
mJ	millijoule
mm	millimeter
mOhm, mΩ	milliohm
MOhm, MΩ	megohm
MOV	metal oxide varistor
MPa	megapascal
mpg	miles per gallon
mph	miles per hour
MS	military standard
ms	millisecond
m/sec.	meters per second
MTBF	mean time between failure
MTBO	mean time between overhauls
mtg.	mounting
MTU	Motoren-und Turbinen-Union
MW	megawatt
mW	milliwatt
μF	microfarad
N, norm.	normal (power source)
NA	not available, not applicable
nat. gas	natural gas
NBS	National Bureau of Standards
NC	normally closed
NEC	National Electrical Code
NEMA	National Electrical Manufacturers Association
NFPA	National Fire Protection Association
Nm	newton meter
NO	normally open
no., nos.	number, numbers
NPS	National Pipe, Straight
NPSC	National Pipe, Straight-coupling
NPT	National Standard taper pipe thread per general use
NPTF	National Pipe, Taper-Fine
NR	not required, normal relay
ns	nanosecond
OC	overcrank
OD	outside diameter
OEM	original equipment manufacturer
OF	overfrequency
opt.	option, optional
OS	oversize, overspeed
OSHA	Occupational Safety and Health Administration
OV	overvoltage
oz.	ounce
p., pp.	page, pages
PC	personal computer
PCB	printed circuit board
pF	picofarad
PF	power factor
ph., ∅	phase
PHC	Phillips® head Crimptite® (screw)
PHH	Phillips® hex head (screw)
PHM	pan head machine (screw)
PLC	programmable logic control
PMG	permanent magnet generator
pot	potentiometer, potential
ppm	parts per million
PROM	programmable read-only memory
psi	pounds per square inch
psig	pounds per square inch gauge
pt.	pint
PTC	positive temperature coefficient
PTO	power takeoff
PVC	polyvinyl chloride
qt.	quart, quarts
qty.	quantity
R	replacement (emergency) power source
rad.	radiator, radius
RAM	random access memory
RDO	relay driver output
ref.	reference
rem.	remote
Res/Coml	Residential/Commercial
RFI	radio frequency interference
RH	round head
RHM	round head machine (screw)
rly.	relay
rms	root mean square
rnd.	round
ROM	read only memory
rot.	rotate, rotating
rpm	revolutions per minute
RS	right side
RTU	remote terminal unit
RTV	room temperature vulcanization
RW	read/write
SAE	Society of Automotive Engineers
scfm	standard cubic feet per minute
SCR	silicon controlled rectifier
s, sec.	second
SI	*Systeme international d'unites,* International System of Units
SI/EO	side in/end out
sil.	silencer
SN	serial number
SNMP	simple network management protocol
SPDT	single-pole, double-throw
SPST	single-pole, single-throw
spec	specification
specs	specification(s)
sq.	square
sq. cm	square centimeter
sq. in.	square inch
SS	stainless steel
std.	standard
stl.	steel
tach.	tachometer
TD	time delay
TDC	top dead center
TDEC	time delay engine cooldown
TDEN	time delay emergency to normal
TDES	time delay engine start
TDNE	time delay normal to emergency
TDOE	time delay off to emergency
TDON	time delay off to normal
temp.	temperature
term.	terminal
THD	total harmonic distortion
TIF	telephone influence factor
TIR	total indicator reading
tol.	tolerance
turbo.	turbocharger
typ.	typical (same in multiple locations)
UF	underfrequency
UHF	ultrahigh frequency
UL	Underwriter's Laboratories, Inc.
UNC	unified coarse thread (was NC)
UNF	unified fine thread (was NF)
univ.	universal
US	undersize, underspeed
UV	ultraviolet, undervoltage
V	volt
VAC	volts alternating current
VAR	voltampere reactive
VDC	volts direct current
VFD	vacuum fluorescent display
VGA	video graphics adapter
VHF	very high frequency
W	watt
WCR	withstand and closing rating
w/	with
w/o	without
wt.	weight
xfmr	transformer

KOHLER®
Power Systems

KOHLER CO. Kohler, Wisconsin 53044
Phone 920-457-4441, Fax 920-459-1646
For the nearest sales/service outlet in the
US and Canada, phone 1-800-544-2444
KOHLERPower.com

Kohler Power Systems
Asia Pacific Headquarters
7 Jurong Pier Road
Singapore 619159
Phone (65) 6264-6422, Fax (65) 6264-6455

TP-6345 9/13j

© 2004, 2005, 2007, 2008, 2011, 2012, 2013 by Kohler Co. All rights reserved.